HC HEAT-EXCHANGERS

Real HVACR people who understand your needs.

Efficacy Catalogue

12/2019

Index

Series	Application	Nom. Capacity @ SC2	Pg
	Rating Conditions & Correction Factors		4
	Capacity Calculation Examples		5

Cubic Unit Cooler Range

Series	Application	Nom. Capacity @ SC2	Pg
HSe300	*Compact Cubic Unit Coolers*	*1 - 18 kw*	8
HSe350	*Compact Cubic Unit Coolers*	*4 - 26 kW*	13
HSe500	*Commercial Cubic Unit Coolers*	*11 - 50 kW*	17
HRe500	*Commercial Cubic Unit Coolers*	*12 - 56 kW*	21
HPe500	*Commercial Cubic Unit Coolers*	*14 - 63 kW*	25
HMe630	*Light Industrial Cubic Unit Coolers*	*25 - 126 kW*	29

Slim Type Unit Cooler Range

Series	Application	Nom. Capacity @ SC2	Pg
HTe250	*Compact Slim Coolers*	*0.5 - 3.6 kw*	35
RONDO	*Compact Slim Coolers*	*0.9 - 6.2 kW*	39
HCe300	*Light Commercial Slim Coolers*	*1.5 - 9.9 kW*	42
HDe300	*Light Commercial Slim Coolers*	*2.2 - 13.9 kW*	46

Dual Discharge Cooler Range

Series	Application	Nom. Capacity @ SC2	Pg
DDe200	*Light Dual Discharge Coolers*	*0.4 - 0.7 kw*	52
DDe250	*Light Dual Discharge Coolers*	*0.9 - 2.9 kW*	52
DDe300	*Light Dual Discharge Coolers*	*1.6 - 12.8 kW*	56
DDe350	*Light Commercial Dual Discharge Coolers*	*3.8 - 27 kW*	60
DDe500	*Commercial Dual Discharge Coolers*	*12 - 63 kW*	64

RATING CONDITIONS AND CORRECTION FACTORS

FIG 1. STD conditions in accordance with **EUROVENT EN 328** standard

Rating	Room Temp	Evap Temp	Delta T (TDi)	Relative Humidity
SC1	10°C	0°C	10K	85%
SC2	0°C	-8°C	8K	85%
SC3	-18°C	-25°C	7K	95%
SC4	-25°C	-31°C	6K	95%

STD capacity shown in kW - R404A

FIG 2. Correction factor **F1** from nominal capacity (SC2) for different evaporating temperatures and TDi

		Evaporating Temperature - °C								
		-35	-30	-25	-20	-15	-10	-5	0	5
TDi - K	5	0.494	0.495	0.496	0.505	0.530	0.532	0.561	0.571	0.582
	6	0.611	0.612	0.615	0.625	0.655	0.671	0.718	0.728	0.761
	7	0.713	0.722	0.737	0.753	0.791	0.818	0.879	0.908	0.950
	8	0.827	0.839	0.853	0.878	0.928	0.973	1.043	1.088	1.146
	9	0.943	0.947	0.977	1.009	1.073	1.119	1.212	1.268	1.345
	10	1.060	1.066	1.103	1.134	1.210	1.278	1.387	1.451	1.564

FIG 3. Correction factor **F2** for Refrigerants at various room temperatures

Room Temp	Refrigerant										
	R404A	R134a	R507A	R407A	R407C	R407F	R448A	R449A	R450A	R452A	R513A
15°C	1.00	0.93	0.97	1.19	1.21	1.19	1.23	1.21	1.10	0.92	0.91
10°C	1.00	0.93	0.97	1.19	1.21	1.19	1.23	1.21	1.10	0.92	0.91
5°C	1.00	0.92	0.97	1.22	1.24	1.22	1.25	1.22	1.11	0.92	0.91
0°C	1.00	0.91	0.97	1.24	1.26	1.24	1.26	1.23	1.12	0.91	0.91
-5°C	1.00	0.90	0.97	1.25	1.27	1.25	1.27	1.23	1.12	0.89	0.90
-10°C	1.00	0.89	0.97	1.26	1.28	1.26	1.27	1.24	1.13	0.88	0.88
-15°C	1.00	0.88	0.97	1.26	1.29	1.27	1.28	1.24	1.13	0.86	0.87
-20°C	1.00	0.86	0.97	1.27	1.30	1.28	1.28	1.24	1.13	0.84	0.85
-25°C	1.00		0.97	1.28	1.31	1.29	1.29	1.29	1.29		
-30°C	1.00		0.97	1.30	1.34	1.32	1.32	1.32	1.32		
-32°C	1.00		0.97	1.31	1.35	1.33	1.31	1.26	1.15		

FIG 4. Correction factor **F3** for heat transfer of different fin materials

FIN Material	F3
Aluminium	1.00
Coated Aluminium	0.97
Copper	1.03

© Copyright HC Heat-Exchangers (PTY) Ltd.

Subject to change without prior notice.

CAPACITY CALCULATION EXAMPLES

SELECTION OF UNIT COOLERS

The capacities of the efficacy unit coolers are stated in accordance with **EUROVENT EN 328** standards at **SC2** rating conditions (FIG 1).
To select a unit cooler applied at other temperature conditions and with refrigerants other than R404A it is necessary to calculate the actual capacity by using the correction factors F1, F2 and F3 (FIG 2, FIG 3 and FIG 4).

FIG 5. Recommended FIN spacing for Room Temperatures

Room Temp	Recommended Fin Spacing
10°C	6FPI / 4.23mm
0°C	
-18°C	
-25°C	4FPI / 6.35mm
-30°C	

EXAMPLE 1:

To select a unit cooler from the nominal capacity tables if the required heat load capacity is known and the application is different to condition SC2.

Heat load = 5.9 kW
Room temperature = 2°C
Delta T (TDi) = 7K
} Evaporating temperature = -5°C f1 = 0.879
Refrigerant = R134A f2 = 0.915
Fin material = Coated aluminim f3 = 0.97

Nominal Capacity = Heat Load / (f1 x f2 x f3)
Nominal Capacity = 5.9 / (0.879 x 0.915 x 0.97)
Nominal Capacity = 5.9 / 0.780
Nominal Capacity = 7.56 kW

From the unit cooler tables you can now select a unit cooler having a nominal capacity closest to 7.56 kW.
Selected Model with a FIN spacing of 6FPI (2°C Room Temp) = **HCe303-1ENX0** (7.44kW)

EXAMPLE 2:

To determine the actual capacity of a specific unit cooler if the application is different to condition SC2.

Unit Cooler = HDe303-1EWX0
Nominal capacity = 10.47 kW (taken from the tables @ SC2)
Room temperature = -10°C
Delta T (TDi) = 5K
} Evaporating temperature = -15°C f1 = 0.530
Refrigerant = R407F f2 = 1.26
Fin material = Copper f3 = 1.03

Actual Capacity = Nominal capacity x F1 x F2 x F3
Actual Capacity = 10.47 x 0.530 x 1.26 x 1.03
Actual Capacity = **7.20 kW**

© Copyright HC Heat-Exchangers (PTY) Ltd.

Subject to change without prior notice.

efficacy

Cubic Unit Coolers

HC HEAT-EXCHANGERS

Real HVACR people who understand your needs.

Cubic Unit Cooler Range

Series	Application	Nom. Capacity @ SC2	Pg
HSe300	*Compact Cubic Unit Coolers*	*1 - 18 kw*	*8*
HSe350	*Compact Cubic Unit Coolers*	*4 - 26 kW*	*13*
HSe500	*Commercial Cubic Unit Coolers*	*11 - 50 kW*	*17*
HRe500	*Commercial Cubic Unit Coolers*	*12 - 56 kW*	*21*
HPe500	*Commercial Cubic Unit Coolers*	*14 - 63 kW*	*25*
HMe630	*Light Industrial Cubic Unit Coolers*	*25 - 126 kW*	*29*

The all new *efficacy* range of unit coolers from HC Heat-Exchangers

The very best kW/cost ratio is now obtainable with ***efficacy*** unit coolers, featuring:

- ***INNER GROOVE*** copper tube technology ensures efficient evaporation of the new refrigerants across all load conditions. The **improvement in heat transfer** is due to the **50-60% increase in internal surface** area when compared to plain tube. The tube-side heat transfer coefficient for inner-groove tubing is as much as **2 ½ - 3 times** higher than traditional plain tube.
- ***STAGGERED TUBE*** pattern with ***WAVERED FIN*** boosts air-side heat transfer performance, reducing dehumidification and frost formation.
- ***OPTIMISED CIRCUITING*** and ***ENHANCED DISTRIBUTOR NOZZLE*** ensures even distribution and greater operating stability. As a result frost formation is more uniform across the coil, leading to less frequent and shorter defrost regimes.
- Completely redesigned and reconfigured **EXTERNAL ZIG-ZAG** heaters offer reduced power input with **improved defrost efficiency**. Moving heaters externally also results In **more live coil tubes**, further enhancing overall **coil performance**.
- All combined the ***efficacy*** unit coolers offer ***HIGHER CAPACITY*** in all operating conditions for a ***WIDER RANGE OF REFRIGERANTS.***

NOMENCLATURE

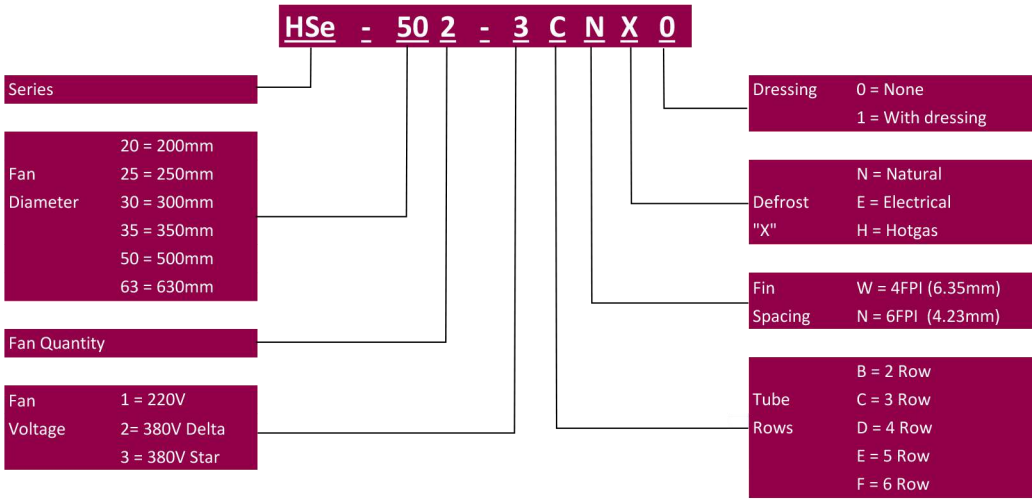

© Copyright HC Heat-Exchangers (PTY) Ltd.

Subject to change without prior notice.

HSe300

COMPACT CUBIC UNIT COOLER

PERFORMANCE DATA							TECHNICAL DATA								
Series - HSe300	Fins Per Inch (Spacing - mm)	Capacity @ SC2 - kW	Capacity @ SC3 - kW	Air Flow - m^3/hr	Air Throw - m [1]	Face Velocity - m/s	Fans - Qty x Dia - mm	Fan Model - ebm-papst	Coil Internal Volume - lt	Coil Surface Area - m^2	Liquid Connection - Inch [2]	Suction Connection - Inch [3]	Electric Defrost - kW [4]	Unit Mass - kg	Drain Fitting - Inch
301-1BNX0	6FPI (4.2mm)	1.88	1.39	1,584	12	2.3	1x300	M4Q 045 34W 300mm	1.2	5.7	1/2"	1/2"	0.7	16	3/4" BSPM
301-1CNX0		2.67	1.97	1,548	11	2.3			1.9	8.6	1/2"	1/2"	0.7	18	
301-1DNX0		3.17	2.34	1,512	10	2.2			2.5	11.5	1/2"	1/2"	1.5	20	
301-1ENX0		3.51	2.59	1,440	9	2.1			3.1	14.3	1/2"	7/8"	1.5	21	
302-1BNX0		3.94	2.90	3,204	12	2.3	2x300		2.4	11.5	1/2"	1/2"	1.3	26	
302-1CNX0		5.34	3.94	3,132	11	2.3			3.5	17.2	1/2"	7/8"	1.3	29	
302-1DNX0		6.38	4.70	3,024	10	2.2			4.7	22.9	1/2"	1-1/8"	2.7	32	
302-1ENX0		7.12	5.25	2,916	9	2.1			5.9	28.7	1/2"	1-1/8"	2.7	34	
303-1CNX0		8.00	5.90	4,680	11	2.3	3x300		5.2	25.8	1/2"	1-1/8"	1.9	39	
303-1DNX0		9.57	7.05	4,536	10	2.2			6.9	34.4	1/2"	1-1/8"	3.9	43	
303-1ENX0		10.68	7.87	4,356	9	2.1			8.7	43.0	1/2"	1-1/8"	3.9	47	
304-1CNX0		10.67	7.86	6,228	11	2.3	4x300		6.9	34.4	1/2"	1-1/8"	2.7	49	
304-1DNX0		12.77	9.41	6,048	10	2.2			9.1	45.9	5/8"	1-1/8"	5.4	55	
304-1ENX0		14.23	10.49	5,832	9	2.1			11.4	57.3	5/8"	1-3/8"	5.4	60	
305-1CNX0		13.46	9.92	7,812	11	2.3	5x300		8.5	43.0	5/8"	1-3/8"	3.3	60	
305-1DNX0		16.01	11.80	7,560	10	2.2			11.4	57.3	5/8"	1-3/8"	6.6	66	
305-1ENX0		17.84	13.15	7,272	9	2.2			14.2	71.7	5/8"	1-3/8"	6.6	73	
301-1BWX0	4FPI (6.35mm)	1.62	1.19	1,620	12	2.4	1x300	M4Q 045 34W 300mm	1.2	4.0	1/2"	1/2"	0.7	17	3/4" BSPM
301-1CWX0		2.29	1.69	1,584	11	2.3			1.9	5.9	1/2"	1/2"	0.7	18	
301-1DWX0		2.80	2.06	1,548	10	2.3			2.5	7.9	1/2"	1/2"	0.7	19	
301-1EWX0		3.20	2.36	1,512	9	2.2			3.1	9.9	1/2"	7/8"	0.7	20	
302-1BWX0		3.33	2.45	3,240	12	2.4	2x300		2.4	7.9	1/2"	1/2"	1.3	26	
302-1CWX0		4.63	3.41	3,168	11	2.3			3.5	11.9	1/2"	7/8"	1.3	28	
302-1DWX0		5.66	4.17	3,132	10	2.3			4.7	15.8	1/2"	7/8"	1.3	30	
302-1EWX0		6.48	4.78	3,060	9	2.2			5.9	19.8	1/2"	1-1/8"	2.7	32	
303-1CWX0		6.95	5.20	4,752	11	2.3	3x300		5.2	17.8	1/2"	1-1/8"	1.9	37	
303-1DWX0		8.49	6.26	4,680	10	2.3			6.9	23.7	1/2"	1-1/8"	1.9	41	
303-1EWX0		9.73	7.17	4,572	9	2.2			8.7	29.6	1/2"	1-1/8"	3.9	44	
304-1CWX0		9.27	6.83	6,336	11	2.3	4x300		6.9	23.7	1/2"	1-1/8"	2.7	47	
304-1DWX0		11.41	8.41	6,228	10	2.3			9.1	31.6	1/2"	1-1/8"	2.7	51	
304-1EWX0		12.97	9.56	6,120	9	2.2			11.4	39.5	5/8"	1-1/8"	5.4	56	
305-1CWX0		11.58	8.53	7,920	11	2.3	5x300		8.5	29.6	5/8"	1-1/8"	3.3	57	
305-1DWX0		14.26	10.51	7,812	10	2.3			11.4	39.5	5/8"	1-3/8"	3.3	62	
305-1EWX0		16.32	12.03	7,632	9	2.2			14.2	49.4	5/8"	1-3/8"	6.6	68	

efficacy
Cubic Unit Coolers

© Copyright HC Heat-Exchangers (PTY) Ltd.

Subject to change without prior notice.

DIMENSIONAL DRAWINGS

HSe301

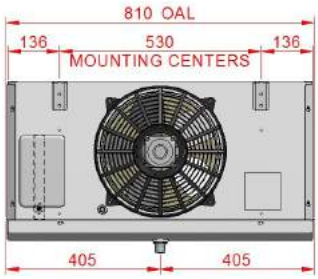

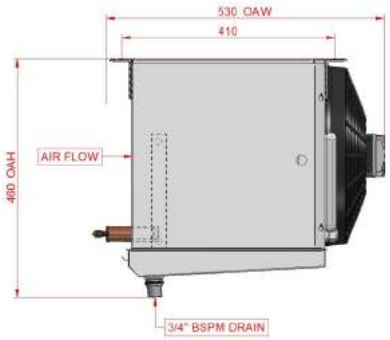

HSe302

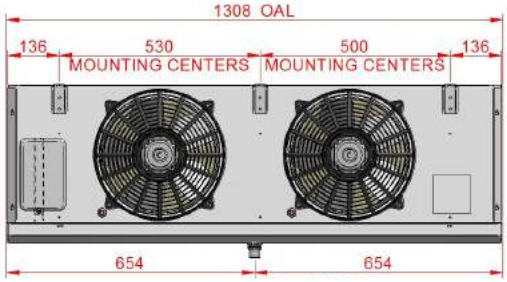

HSe303

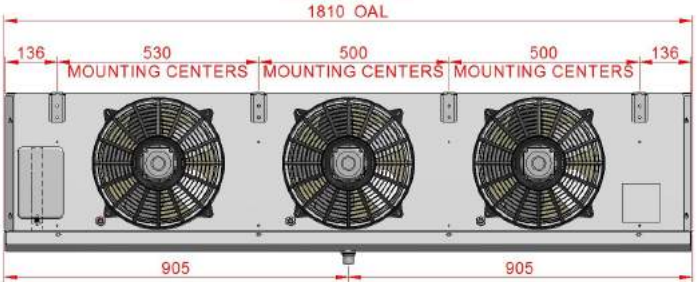

HSe304

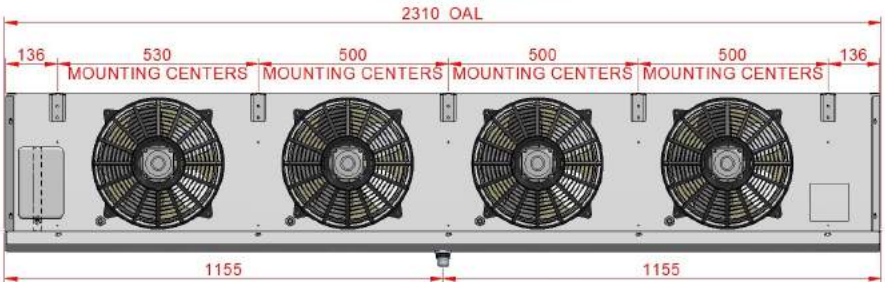

HSe305

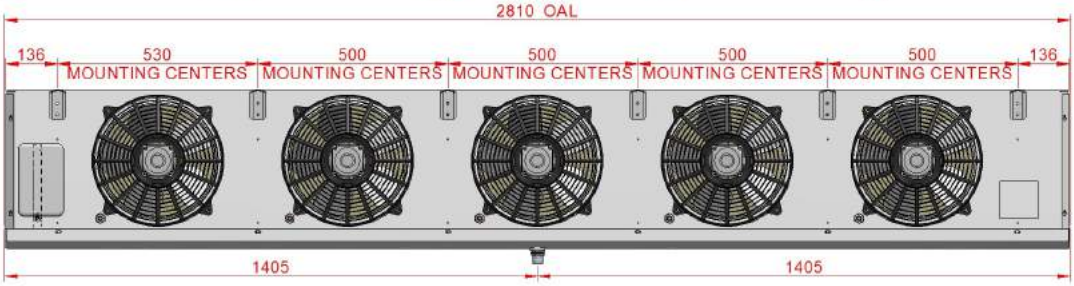

© Copyright HC Heat-Exchangers (PTY) Ltd.

Subject to change without prior notice.

ELEMENT DRAWINGS

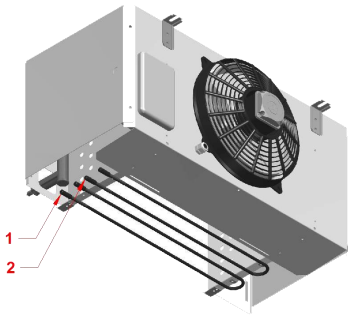

HSe301

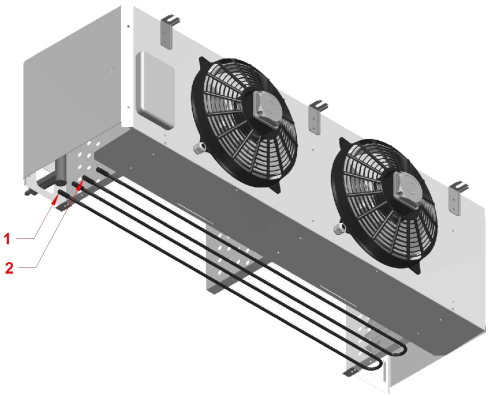

HSe302

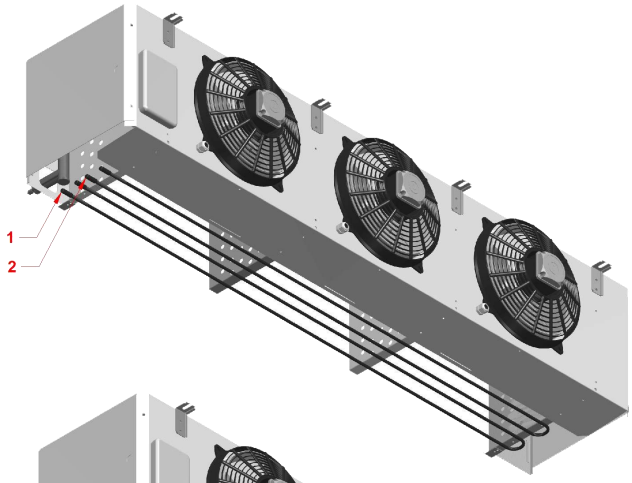

HSe303

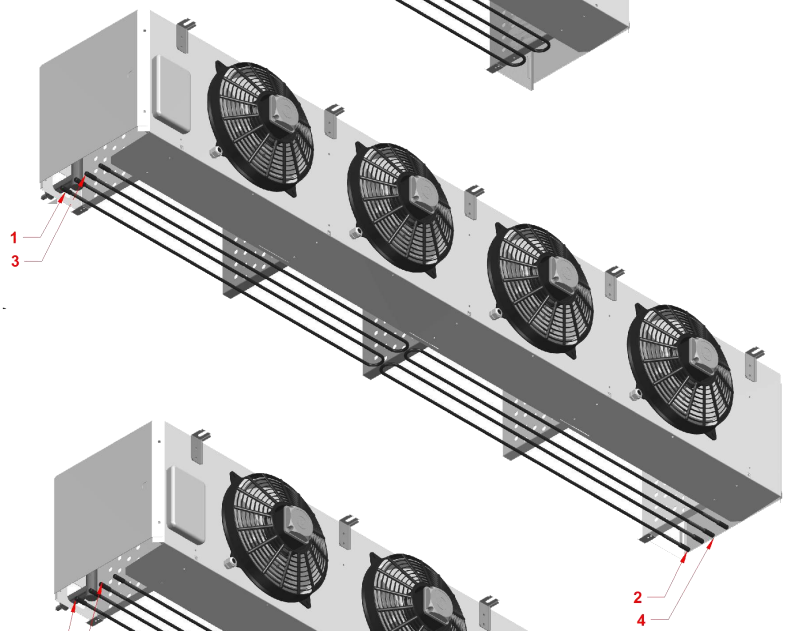

HSe304

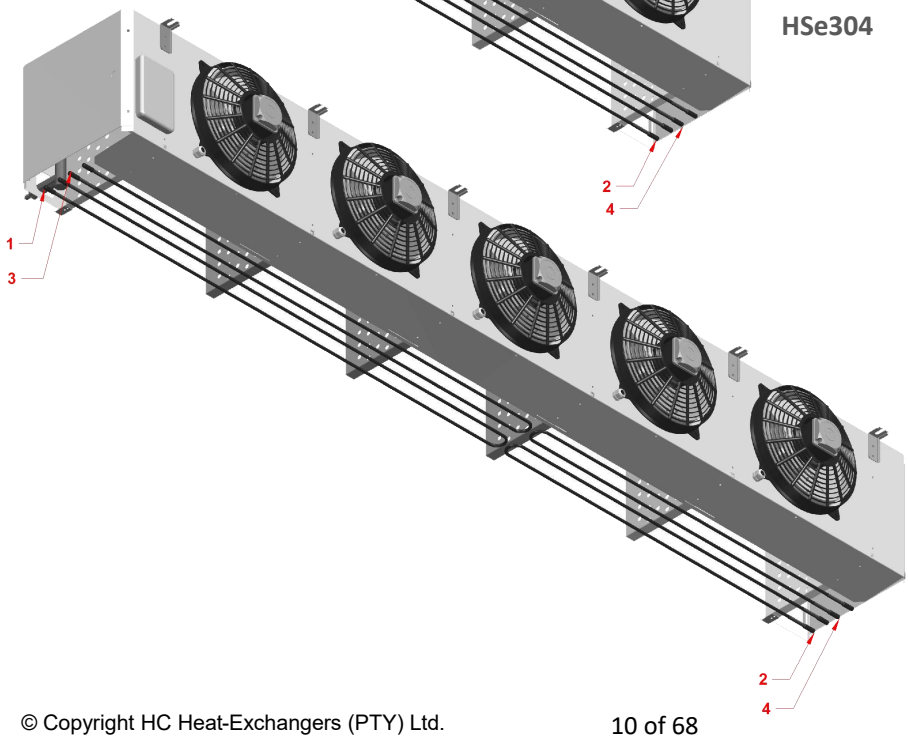

HSe305

efficacy
Cubic Unit Coolers

© Copyright HC Heat-Exchangers (PTY) Ltd.

Subject to change without prior notice.

ELECTRICAL SPECIFICATIONS

Defrost Technical & Wiring Data						
Model	Phase	Heater	Watts	Volts	Amps	Klixon
301-1BWE	L1	1	738	230	3.2	14T31(25A)
301-1CWE	L1	1	738	230	3.2	14T31(25A)
301-1DWE	L1	1+2	1476	230	6.4	14T31(25A)
301-1EWE	L1	1+2	1476	230	6.4	14T31(25A)
302-1BWE	L1	1	1338	230	5.8	14T31(25A)
302-1CWE	L1	1	1338	230	5.8	14T31(25A)
302-1DWE	L1	1+2	2676	230	11.6	14T31(25A)
302-1EWE	L1	1+2	2676	230	11.6	14T31(25A)
303-1CWE	L1	1	1938	230	8.4	14T31(25A)
303-1DWE	L1	1+2	3876	230	16.9	14T31(25A)
303-1EWE	L1	1+2	3876	230	16.9	14T31(25A)
304-1CWE	L1	1+2	2676	230	11.6	14T31(25A)
304-1DWE	L1	1+2+3+4	5352	230	23.3	14T31(25A)
304-1EWE	L1	1+2+3+4	5352	230	23.3	14T31(25A)
305-1CWE	L1	1+2	3276	230	14.2	14T31(25A)
305-1DWE	L1	1+2+3+4	6552	230	28.5	14T31(25A)
305-1EWE	L1	1+2+3+4	6552	230	28.5	14T31(25A)

Defrost Technical & Wiring Data						
Model	Phase	Heater	Watts	Volts	Amps	Klixon
301-1BNE	L1	1	738	230	3.2	14T31(25A)
301-1CNE	L1	1+2	1476	230	6.4	14T31(25A)
301-1DNE	L1	1+2	1476	230	6.4	14T31(25A)
301-1ENE	L1	1+2	1476	230	6.4	14T31(25A)
302-1BNE	L1	1	1338	230	5.8	14T31(25A)
302-1CNE	L1	1+2	2676	230	11.6	14T31(25A)
302-1DNE	L1	1+2	2676	230	11.6	14T31(25A)
302-1ENE	L1	1+2	2676	230	11.6	14T31(25A)
303-1CNE	L1	1+2	3876	230	16.9	14T31(25A)
303-1DNE	L1	1+2	3876	230	16.9	14T31(25A)
303-1ENE	L1	1+2	3876	230	16.9	14T31(25A)
304-1CNE	L1	1+2+3+4	5352	230	23.3	14T31(25A)
304-1DNE	L1	1+2+3+4	5352	230	23.3	14T31(25A)
304-1ENE	L1	1+2+3+4	5352	230	23.3	14T31(25A)
305-1CNE	L1	1+2+3+4	6552	230	28.5	14T31(25A)
305-1DNE	L1	1+2+3+4	6552	230	28.5	14T31(25A)
305-1ENE	L1	1+2+3+4	6552	230	28.5	14T31(25A)

© Copyright HC Heat-Exchangers (PTY) Ltd.

Subject to change without prior notice.

ELECTRICAL SPECIFICATIONS

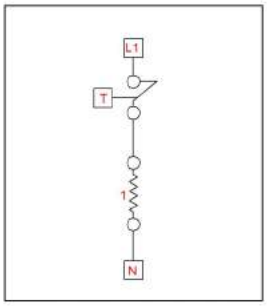

301-303(2R/3R)

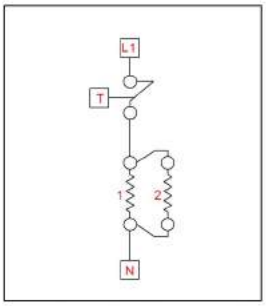

301-305(3R,4R&5R)

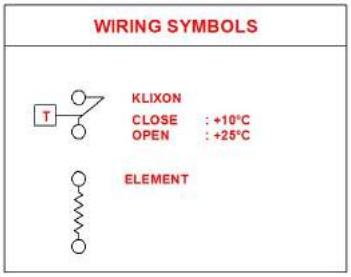

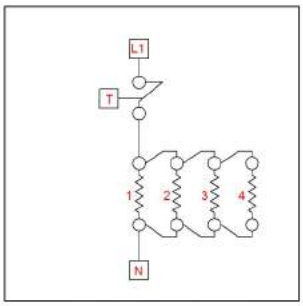

304-305(4R/5R)

Fan Technical & Wiring Data					
Standard (AC - 1 Phase)					
EBM 34W Shaded Pole Motor & 300Ø 34° Form 'V' Fan Blade					
Diameter mm	**Voltage V**	**Frequency Hz**	**RPM**	**Power W**	**Amperage A**
300	230	50	1300	110	0.75
Optional (AC—1 Phase)					
EBM S4E300 External Rotor Motor					
Diameter mm	**Voltage V**	**Frequency Hz**	**RPM**	**Power W**	**Amperage A**
300	230	50	1400	70	0.32

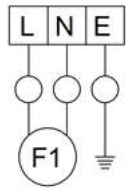

L - BLUE
N - BROWN
E - GREEN/YELLOW
F1 - FAN MOTOR

HSe350

COMPACT CUBIC UNIT COOLER

PERFORMANCE DATA							TECHNICAL DATA								
Series - HSe350	Fins Per Inch (Spacing - mm)	Capacity @ SC2 - kW	Capacity @ SC3 - kW	Air Flow - m^3/hr	Air Throw - m [1]	Face Velocity - m/s	Fans - Qty x Dia - mm	Fan Model - ebm-papst	Coil Internal Volume - lt	Coil Surface Area - m^2	Liquid Connection - Inch [2]	Suction Connection - Inch [3]	Electric Defrost - kW [4]	Unit Mass - kg	Drain Fitting - Inch
351-1DNX0	6FPI (4.2mm)	5.12	3.77	2 772	14	2.9	1x350	S4E350	3.5	16.1	1/2"	7/8"	1.9	23	3/4" BSPM
351-1FNX0		6.36	4.69	2 592	14	2.7			5.2	24.2	1/2"	1-1/8"	1.9	27	
352-1DNX0		10.32	7.61	5 508	15	2.9	2x350		6.6	32.2	1/2"	1-1/8"	3.8	38	
352-1FNX0		12.80	9.43	5 184	15	2.7			9.9	48.3	5/8"	1-1/8"	3.8	44	
353-1DNX0		15.49	11.42	8 280	16	2.9	3x350		9.7	48.3	5/8"	1-3/8"	5.8	51	
353-1FNX0		19.26	14.19	7 812	16	2.7			14.5	72.5	5/8"	1-3/8"	5.8	61	
354-1DNX0		20.73	15.28	11 016	17	2.9	4x350		12.8	64.4	5/8"	1-3/8"	7.7	65	
354-1FNX0		25.68	18.93	10 404	17	2.7			19.2	96.6	5/8"	1-3/8"	7.7	78	
351-1DWX0	4FPI (6.35mm)	4.52	3.33	2 844	15	3.0	1x350	S4E350	3.5	11.1	1/2"	7/8"	1.9	26	3/4" BSPM
351-1FWX0		5.80	4.27	2 700	15	2.8			5.2	16.7	1/2"	7/8"	1.9	26	
352-1DWX0		9.12	6.72	5 688	16	3.0	2x350		6.6	22.2	1/2"	1-1/8"	3.8	37	
352-1FWX0		11.68	8.61	5 436	16	2.8			9.9	33.3	5/8"	1-1/8"	3.8	43	
353-1DWX0		13.67	10.07	8 496	17	3.0	3x350		9.7	33.3	5/8"	1-3/8"	5.8	49	
353-1FWX0		17.63	12.99	8 136	17	2.8			14.5	49.9	5/8"	1-3/8"	5.8	58	
354-1DWX0		18.23	13.44	11 340	18	3.0	4x350		12.8	44.4	5/8"	1-3/8"	7.7	63	
354-1FWX0		23.51	17.33	10 872	18	2.8			19.2	66.6	5/8"	1-3/8"	7.7	75	

[1] Measured at 0.25 m/s

[2] Sized to suit nominal expansion valve outlet

[3] Calculated on 15 metre equivalent length (distance between the condensing unit and the unit cooler)

[4] Optional but recommended for rooms below 1°C

efficacy
Cubic Unit Coolers

© Copyright HC Heat-Exchangers (PTY) Ltd.

Subject to change without prior notice.

DIMENSIONAL DRAWINGS

HSe351

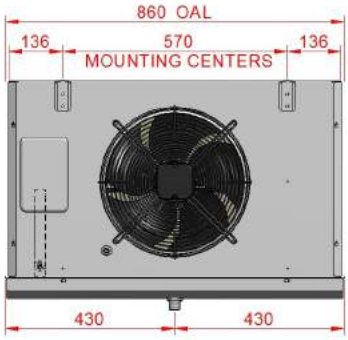

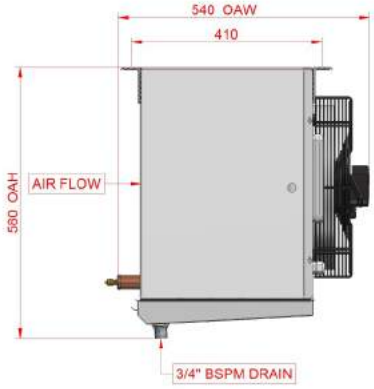

HSe352

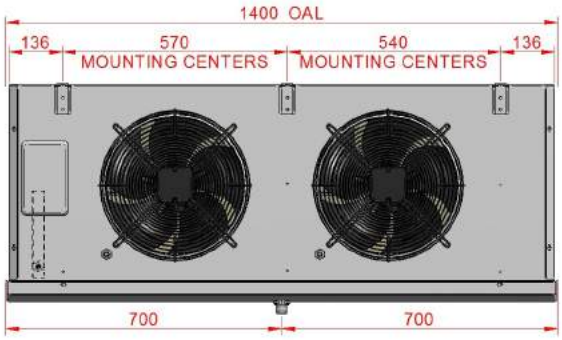

HSe353

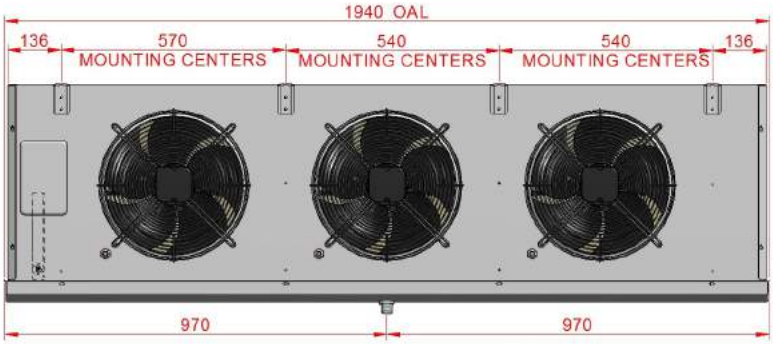

HSe354

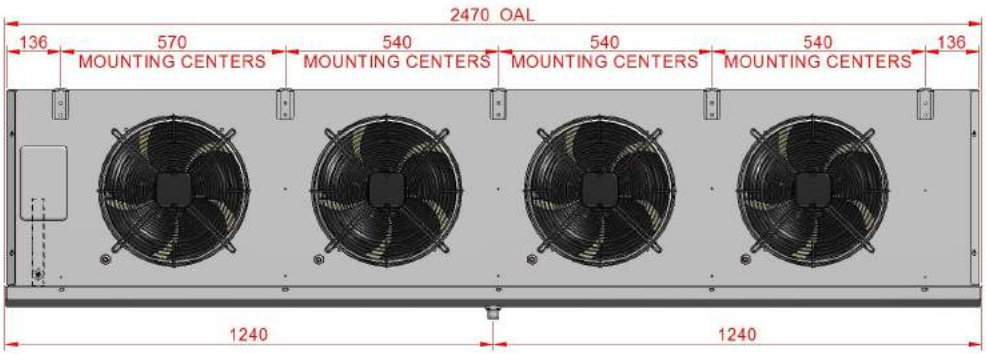

© Copyright HC Heat-Exchangers (PTY) Ltd.

Subject to change without prior notice.

ELEMENT DRAWINGS

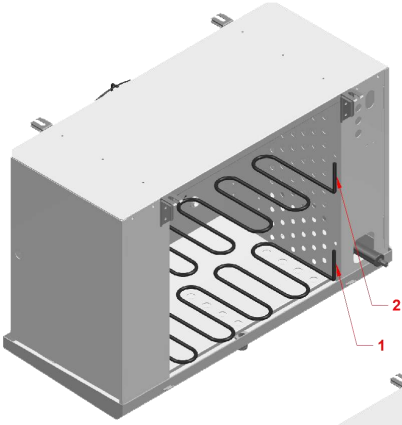

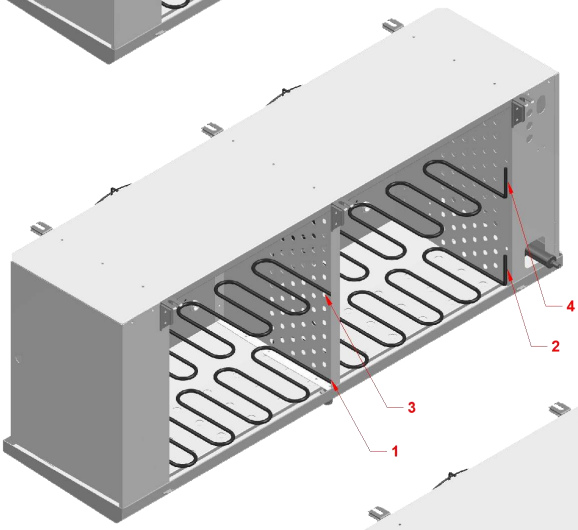

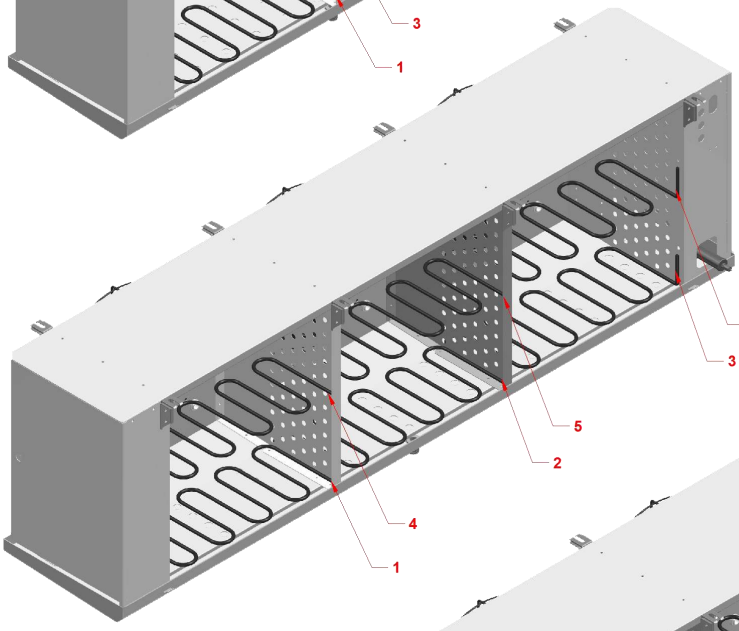

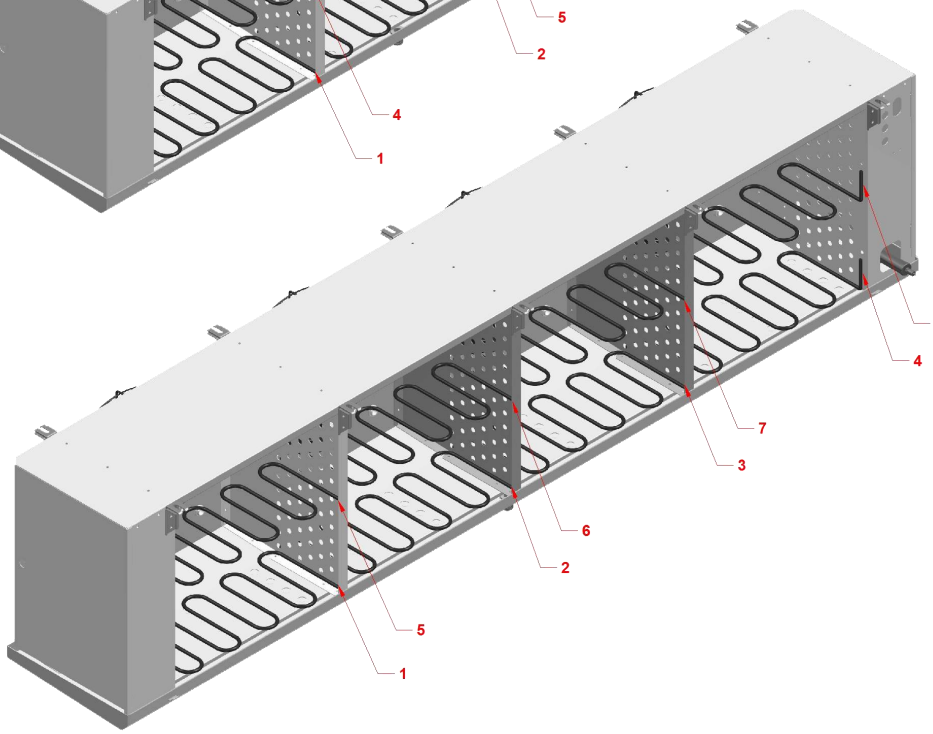

© Copyright HC Heat-Exchangers (PTY) Ltd.

Subject to change without prior notice.

ELECTRICAL SPECIFICATIONS

Defrost Technical & Wiring Data						
Model	**Phase**	**Heater**	**Watts**	**Volts**	**Amps**	**Klixon**
351	L1	1+2	2640	230	11.4	14T31(25A)
352	L1	1+2+3+4	5280	230	22.9	14T31(25A)
353	L1	1+2+3	3960	230	17.2	14T31(25A)
	L2	4+5+6	3960	230	17.2	
354	L1	1+2+3+4	5280	230	22.9	14T31(25A)
	L2	5+6+7+8	5280	230	22.9	

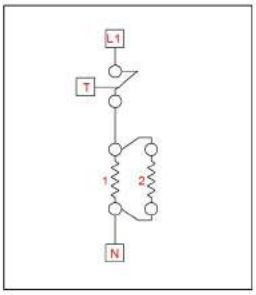

351

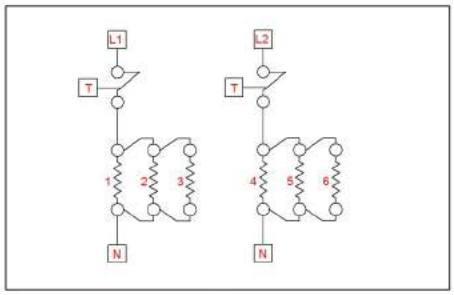

353

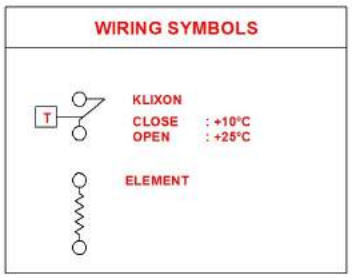

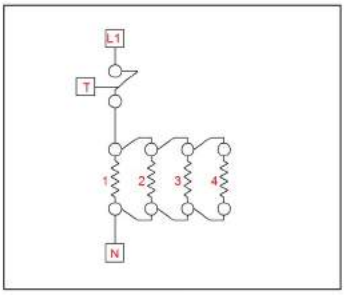

352

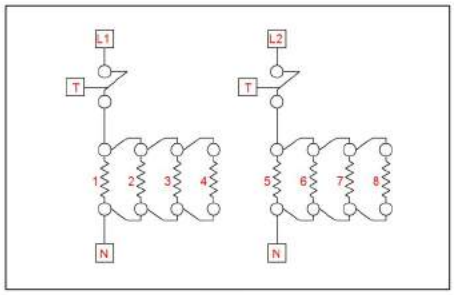

354

Fan Technical & Wiring Data					
Standard (AC - 1 Phase)					
EBM S4E350 External Rotor Motor					
Diameter mm	**Voltage V**	**Frequency Hz**	**RPM**	**Power W**	**Amperage A**
350	230	50	1400	130	0.58
Optional (AC - 3 Phase)					
EBM S4D350 External Rotor Motor					
Diameter mm	**Voltage V**	**Frequency Hz**	**RPM**	**Power W**	**Amperage A**
350	400	50	1365	130	0.35

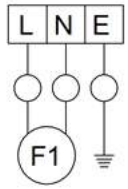

L - BLUE
N - BROWN
E - GREEN/YELLOW
F1 - FAN MOTOR

HSe500

COMMERCIAL CUBIC UNIT COOLER

PERFORMANCE DATA							TECHNICAL DATA								
Series - HSe500	Fins Per Inch (Spacing - mm)	Capacity @ SC2 - kW	Capacity @ SC3 - kW	Air Flow - m^3/hr	Air Throw - m [1]	Face Velocity - m/s	Fans - Qty x Dia - mm	Fan Model - ebm-papst	Coil Internal Volume - lt	Coil Surface Area - m^2	Liquid Connection - Inch [2]	Suction Connection - Inch [3]	Electric Defrost - kW [4]	Unit Mass - kg	Drain Fitting - Inch
501-3DNX0	6FPI (4.2mm)	13.15	9.69	8 748	20	4.2	1x500	S4D500 - DELTA	7.1	34.9	5/8"	1-1/8"	4.2	79	1-1/4" NPSM
501-3FNX0		17.02	12.54	8 208	20	4.0			10.6	51.7	5/8"	1-3/8"	4.2	86	
502-3DNX0		26.56	19.57	17 496	24	4.2	2x500		13.8	69.0	5/8"	1-3/8"	8.4	132	
502-3FNX0		34.16	25.18	16 452	24	4.0			20.6	103.5	7/8"	1-5/8"	8.4	146	
503-3DNX0		38.12	28.09	25 848	27	4.5	3x500		19.2	97.2	7/8"	1-5/8"	12.6	181	
503-3FNX0		49.32	36.35	24 156	27	4.2			28.8	145.9	1-1/8"	2-1/8"	12.6	200	
501-3DWX0	4FPI (6.35mm)	11.55	8.51	9 000	21	4.4	1x500	S4D500 - DELTA	7.1	23.8	5/8"	1-1/8"	4.2	78	1-1/4" NPSM
501-3FWX0		15.31	11.28	8 568	21	4.2			10.6	35.7	5/8"	1-3/8"	4.2	84	
502-3DWX0		23.09	17.02	18 000	25	4.4	2x500		13.8	47.6	5/8"	1-3/8"	8.4	130	
502-3FWX0		30.75	22.66	17 172	25	4.2			20.6	71.3	7/8"	1-5/8"	8.4	143	
503-3DWX0		33.30	24.54	26 748	27	4.6	3x500		19.2	67.0	7/8"	1-5/8"	12.6	178	
503-3FWX0		44.31	32.66	25 380	27	4.4			28.8	100.5	1-1/8"	2-1/8"	12.6	196	
501-SDNX0	6FPI (4.2mm)	12.16	8.96	7 164	15	3.5	1x500	S4D500 - STAR	7.1	34.9	5/8"	1-1/8"	4.2	79	1-1/4" NPSM
501-SFNX0		15.25	11.24	6 660	15	3.2			10.6	51.7	5/8"	1-3/8"	4.2	86	
502-SDNX0		24.32	17.92	14 364	19	3.5	2x500		13.8	69.0	5/8"	1-3/8"	8.4	132	
502-SFNX0		30.58	22.54	13 356	19	3.2			20.6	103.5	7/8"	1-5/8"	8.4	146	
503-SDNX0		35.16	25.91	21 204	22	3.7	3x500		19.2	97.2	7/8"	1-5/8"	12.6	181	
503-SFNX0		44.20	32.58	19 620	22	3.4			28.8	145.9	1-1/8"	2-1/8"	12.6	200	
501-SDWX0	4FPI (6.35mm)	10.63	7.83	7 416	16	3.6	1x500	S4D500 - STAR	7.1	23.8	5/8"	1-1/8"	4.2	78	1-1/4" NPSM
501-SFWX0		13.90	10.24	7 020	16	3.4			10.6	35.7	5/8"	1-3/8"	4.2	84	
502-SDWX0		21.47	15.82	14 868	20	3.6	2x500		13.8	47.6	5/8"	1-3/8"	8.4	130	
502-SFWX0		27.89	20.55	14 076	20	3.4			20.6	71.3	7/8"	1-5/8"	8.4	143	
503-SDWX0		30.86	22.74	22 032	22	3.8	3x500		19.2	67.0	7/8"	1-5/8"	12.6	178	
503-SFWX0		40.35	29.74	20 736	22	3.6			28.8	100.5	1-1/8"	2-1/8"	12.6	196	

[1] Measured at 0.25 m/s

[2] Sized to suit nominal expansion valve outlet

[3] Calculated on 15 metre equivalent length (distance between the condensing unit and the unit cooler)

[4] Optional but recommended for rooms below 1°C

efficacy
Cubic Unit Coolers

© Copyright HC Heat-Exchangers (PTY) Ltd.

Subject to change without prior notice.

DIMENSIONAL DRAWINGS

HSe501

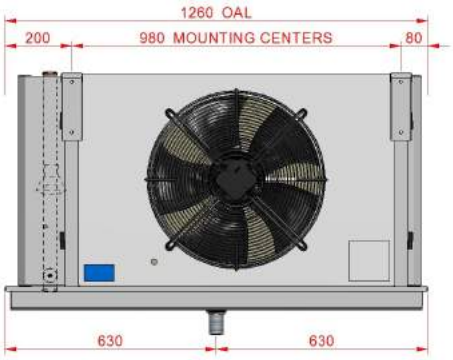

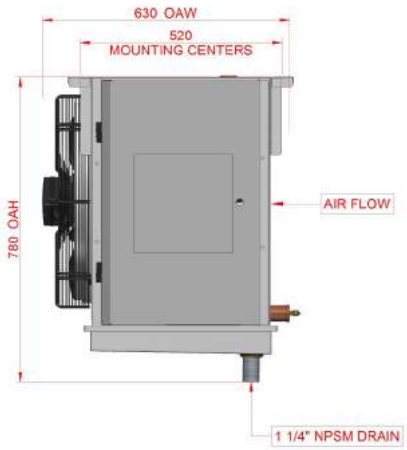

HSe502

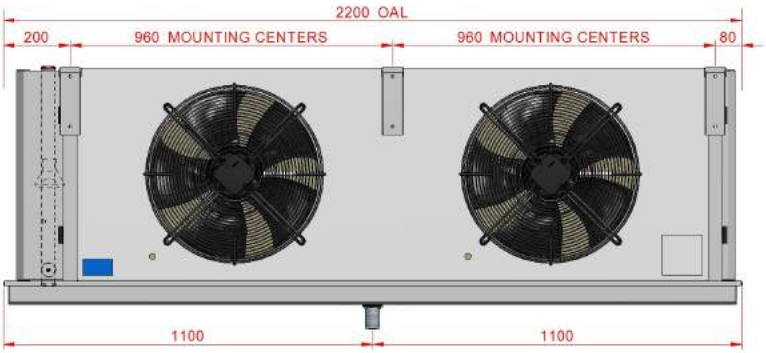

HSe503

© Copyright HC Heat-Exchangers (PTY) Ltd.

Subject to change without prior notice.

ELEMENT DRAWINGS

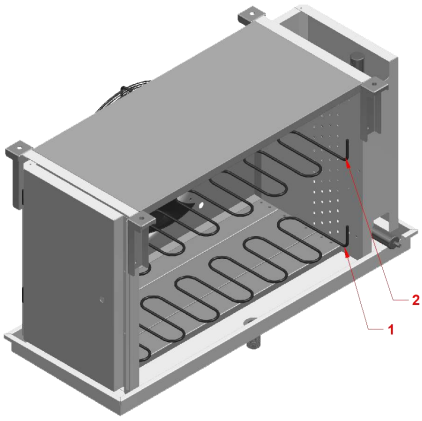

HSe501

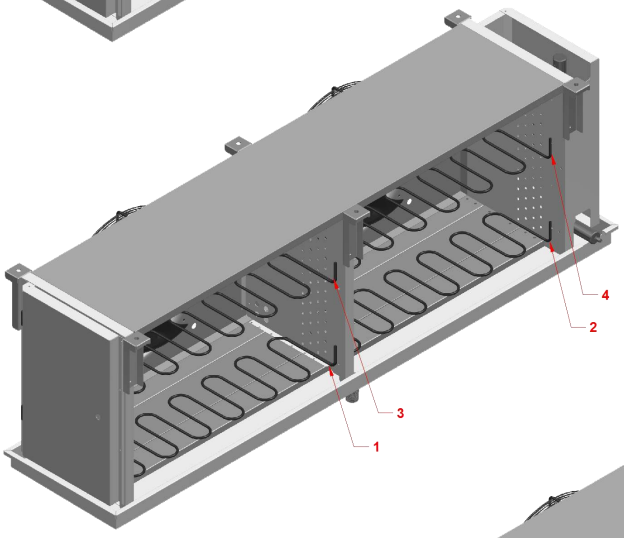

HSe502

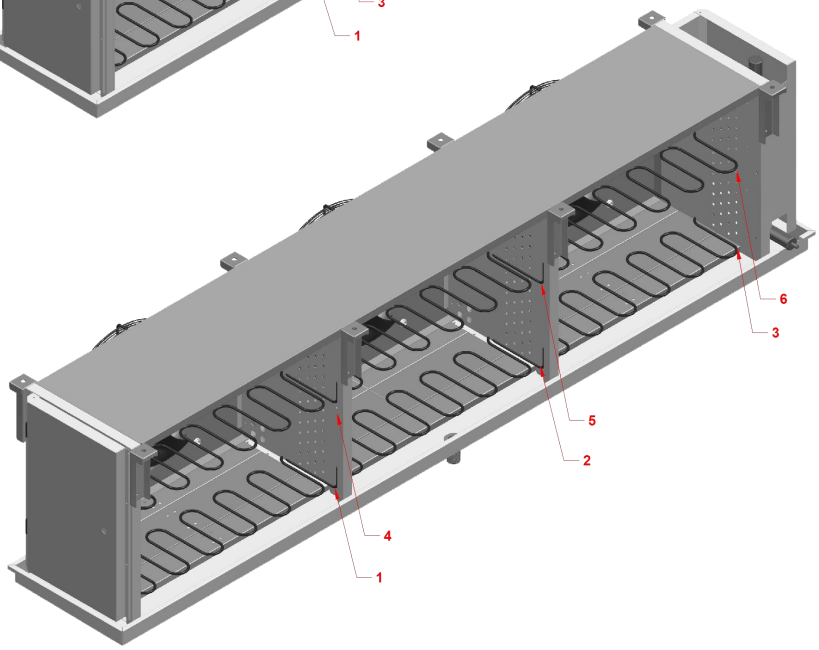

HSe503

ELECTRICAL SPECIFICATIONS

Defrost Technical & Wiring Data						
Model	**Phase**	**Heater**	**Watts**	**Volts**	**Amps**	**Klixon**
501	L1	1+2	4320	230	18.8	14T31(25A)
502	L1	1+2	4320	230	18.8	14T31(25A)
	L2	3+4	4320	230	18.8	
503	L1	1+2	4320	230	18.8	14T31(25A)
	L2	3+4	4320	230	18.8	
	L3	5+6	4320	230	18.8	

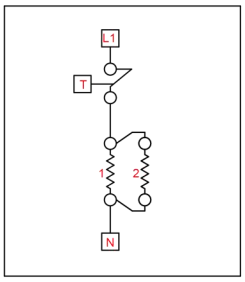

501

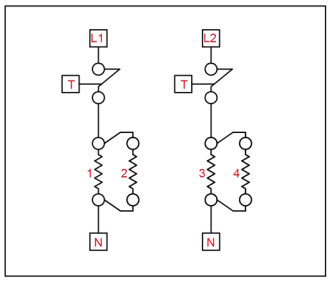

502

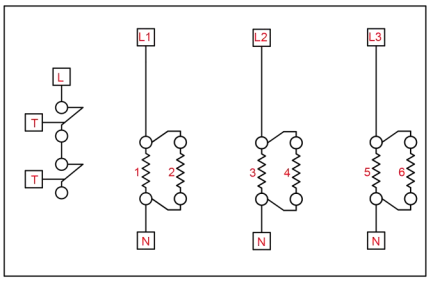

503

CONNECT DEFROST KLIXON INTO DEFROST CONTROL CIRCUIT ON 503

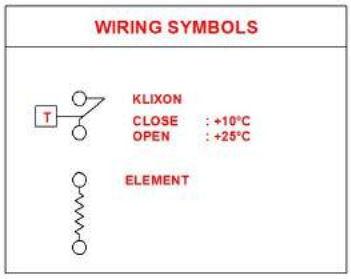

Fan Technical & Wiring Data					
Standard (AC - 3 Phase Delta)					
EBM S4D500 External Rotor Motor					
Diameter mm	**Voltage V**	**Frequency Hz**	**RPM**	**Power W**	**Amperage A**
500	400	50	1390	720	1.41
Optional (EC - 3 Phase)					
EBM S3G500 External Rotor Motor					
Diameter mm	**Voltage V**	**Frequency Hz**	**RPM**	**Power W**	**Amperage A**
500	400	50	1440	1050	1.9
Optional (AC - 1 Phase)					
EBM S4E500 External Rotor Motor					
Diameter mm	**Voltage V**	**Frequency Hz**	**RPM**	**Power W**	**Amperage A**
500	230	50	1300	680	3.00

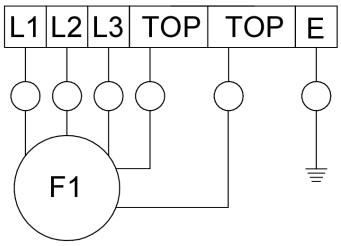

L1 - BLACK
L2 - BLUE
L3 - BROWN
TOP - PURPLE
TOP - PINK
E - GREEN/YELLOW
F1 - FAN MOTOR

© Copyright HC Heat-Exchangers (PTY) Ltd.

Subject to change without prior notice.

HRe500

COMMERCIAL CUBIC UNIT COOLER

PERFORMANCE DATA							TECHNICAL DATA									
Series - HRe500	Fins Per Inch (Spacing - mm)	Capacity @ SC2 - kW	Capacity @ SC3 - kW	Air Flow - m^3/hr	Air Throw - m [1]	Face Velocity - m/s	Fans - Qty x Dia - mm	Fan Model - ebm-papst	Coil Internal Volume - lt	Coil Surface Area - m^2	Liquid Connection - Inch [2]	Suction Connection - Inch [3]	Electric Defrost - kW [4]	Unit Mass - kg	Drain Fitting - Inch
501-3DNX0	6FPI (4.2mm)	15.25	11.24	9,072	19	3.5	1x500	S4D500 - DELTA	7.1	34.9	5/8"	1-3/8"	6.3	88	1-1/4" NPSM
501-3FNX0		19.48	14.36	8,712	19	3.4			10.6	51.7	5/8"	1-3/8"	6.3	97	
502-3DNX0		30.64	22.58	18,144	23	3.5	2x500		13.8	69.0	7/8"	1-5/8"	12.6	149	
502-3FNX0		39.08	28.80	17,388	23	3.4			20.6	103.5	7/8"	1-5/8"	12.6	166	
503-3DNX0		44.35	32.69	27,000	25	3.7	3x500		19.2	97.2	1-1/8"	2-1/8"	18.9	202	
503-3FNX0		56.74	41.82	25,740	25	3.5			28.8	145.9	1-1/8"	2-1/8"	18.9	225	
501-3DWX0	4FPI (6.35mm)	13.37	9.85	9,252	20	3.6	1x500	S4D500 - DELTA	7.1	23.8	5/8"	1-3/8"	6.3	87	1-1/4" NPSM
501-3FWX0		17.58	12.96	8,964	20	3.5			10.6	35.7	5/8"	1-3/8"	6.3	95	
502-3DWX0		26.75	19.71	18,504	24	3.6	2x500		13.8	47.6	7/8"	1-5/8"	12.6	147	
502-3FWX0		35.15	25.91	17,928	24	3.5			20.6	71.3	7/8"	1-5/8"	12.6	163	
503-3DWX0		38.59	28.44	27,576	26	3.8	3x500		19.2	67.0	1-1/8"	2-1/8"	18.9	198	
503-3FWX0		51.02	37.60	26,640	26	3.7			28.8	100.5	1-1/8"	2-1/8"	18.9	221	
501-SDNX0	6FPI (4.2mm)	13.93	10.27	7,488	14	2.9	1x500	S4D500 - STAR	7.1	34.9	5/8"	1-3/8"	6.3	88	1-1/4" NPSM
501-SFNX0		17.33	12.77	7,092	14	2.8			10.6	51.7	5/8"	1-3/8"	6.3	97	
502-SDNX0		27.97	20.61	15,012	18	2.9	2x500		13.8	69.0	7/8"	1-5/8"	12.6	149	
502-SFNX0		34.76	25.62	14,220	18	2.8			20.6	103.5	7/8"	1-5/8"	12.6	166	
503-SDNX0		40.49	29.84	22,248	20	3.1	3x500		19.2	97.2	1-1/8"	2-1/8"	18.9	202	
503-SFNX0		50.60	37.29	20,988	20	2.9			28.8	145.9	1-1/8"	2-1/8"	18.9	225	
501-SDWX0	4FPI (6.35mm)	12.25	9.03	7,704	15	3.0	1x500	S4D500 - STAR	7.1	23.8	5/8"	1-3/8"	6.3	87	1-1/4" NPSM
501-SFWX0		15.78	11.63	7,380	15	2.9			10.6	35.7	5/8"	1-3/8"	6.3	95	
502-SDWX0		24.60	18.13	15,372	19	3.0	2x500		13.8	47.6	7/8"	1-5/8"	12.6	147	
502-SFWX0		31.76	23.41	14,760	19	2.9			20.6	71.3	7/8"	1-5/8"	12.6	163	
503-SDWX0		35.55	26.20	22,860	21	3.2	3x500		19.2	67.0	1-1/8"	2-1/8"	18.9	198	
503-SFWX0		46.07	33.95	21,924	21	3.0			28.8	100.5	1-1/8"	2-1/8"	18.9	221	

[1] Measured at 0.25 m/s

[2] Sized to suit nominal expansion valve outlet

[3] Calculated on 15 metre equivalent length (distance between the condensing unit and the unit cooler)

[4] Optional but recommended for rooms below 1°C

efficacy
Cubic Unit Coolers

© Copyright HC Heat-Exchangers (PTY) Ltd.

Subject to change without prior notice.

DIMENSIONAL DRAWINGS

HRe501

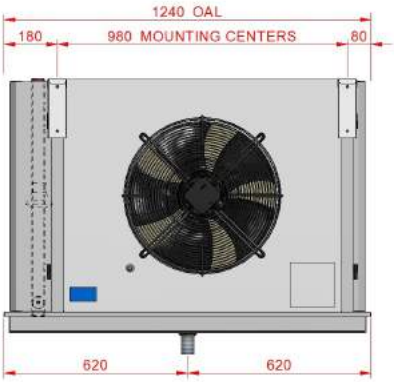

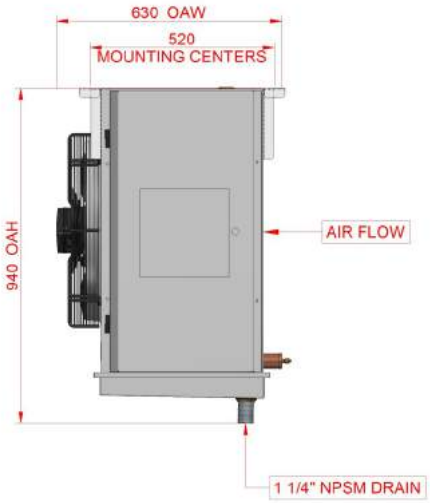

HRe502

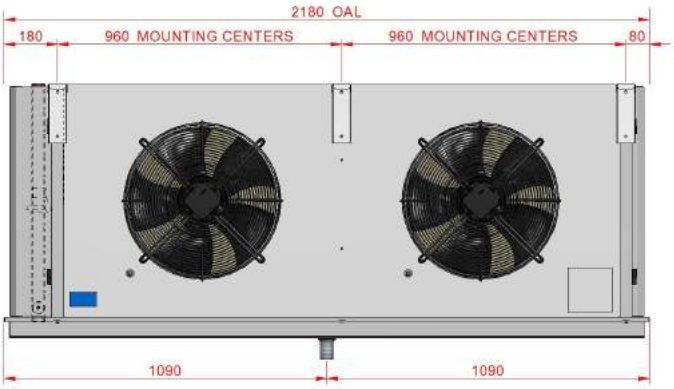

HRe503

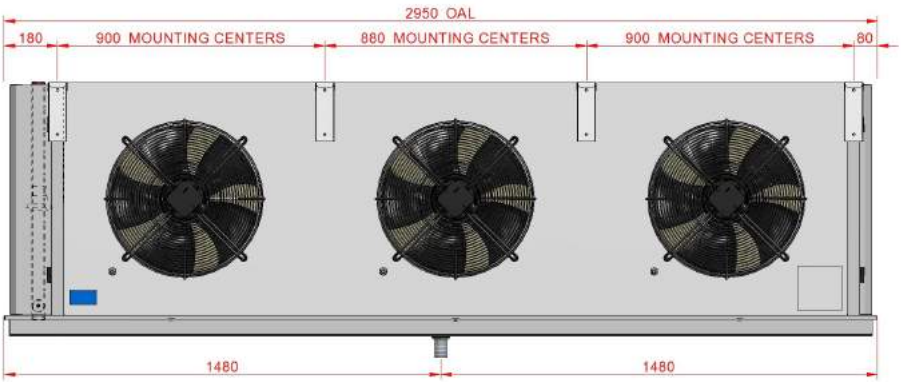

© Copyright HC Heat-Exchangers (PTY) Ltd.

Subject to change without prior notice.

ELEMENT DRAWINGS

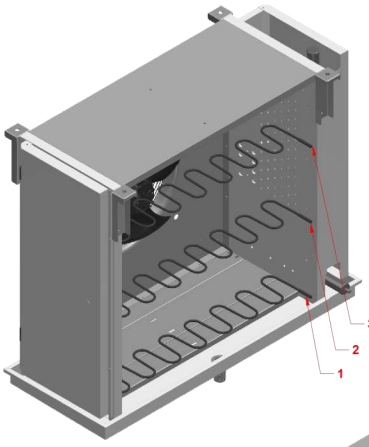

HRe501

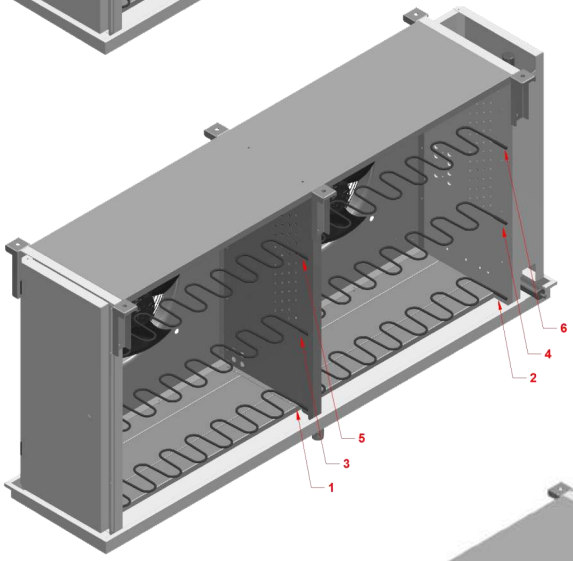

HRe502

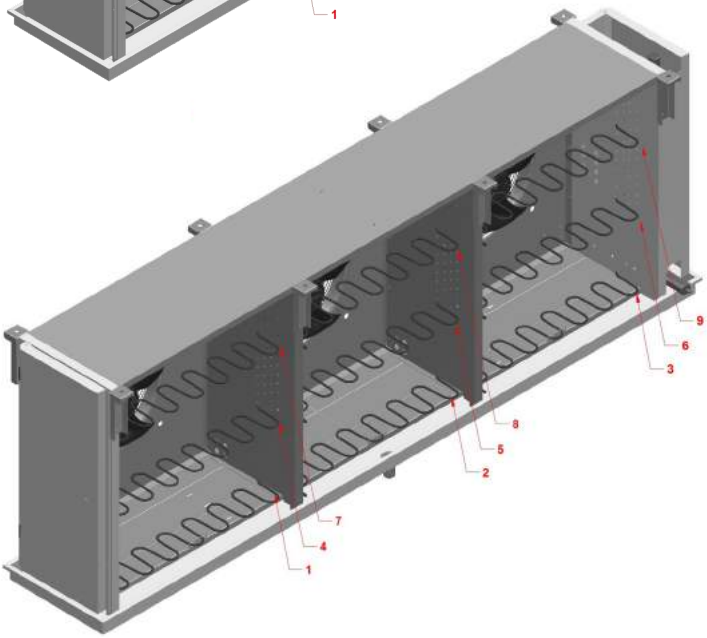

HRe503

© Copyright HC Heat-Exchangers (PTY) Ltd.

Subject to change without prior notice.

ELECTRICAL SPECIFICATIONS

Defrost Technical & Wiring Data						
Model	**Phase**	**Heater**	**Watts**	**Volts**	**Amps**	**Klixon**
501	L1	1+2	4320	230	18.8	14T31(25A)
	L2	3	2160	230	9.4	
502	L1	1+2	4320	230	18.8	14T31(25A)
	L2	3+4	4320	230	18.8	
	L3	5+6	4320	230	18.8	
503	L1	1+2+3	6480	230	28.1	14T31(25A)
	L2	4+5+6	6480	230	28.1	
	L3	7+8+9	6480	230	28.1	

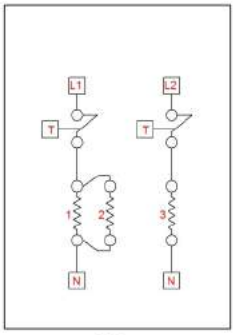

501

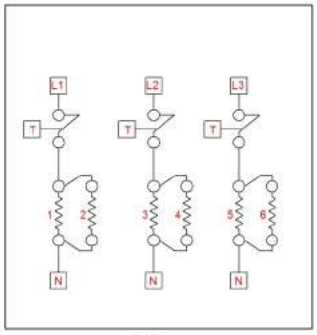

502

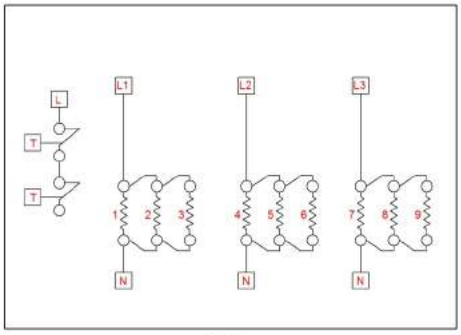

503

CONNECT DEFROST KLIXON INTO DEFROST CONTROL CIRCUIT ON 503

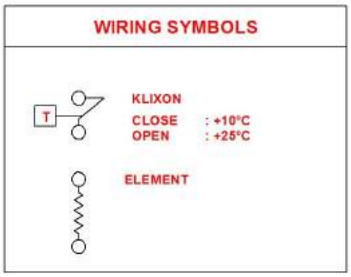

Fan Technical & Wiring Data					
Standard (AC - 3 Phase Delta)					
EBM S4D500 External Rotor Motor					
Diameter mm	**Voltage V**	**Frequency Hz**	**RPM**	**Power W**	**Amperage A**
500	400	50	1390	720	1.41
Optional (EC - 3 Phase)					
EBM S3G500 External Rotor Motor					
Diameter mm	**Voltage V**	**Frequency Hz**	**RPM**	**Power W**	**Amperage A**
500	400	50	1440	1050	1.9
Optional (AC - 1 Phase)					
EBM S4E500 External Rotor Motor					
Diameter mm	**Voltage V**	**Frequency Hz**	**RPM**	**Power W**	**Amperage A**
500	230	50	1300	680	3.00

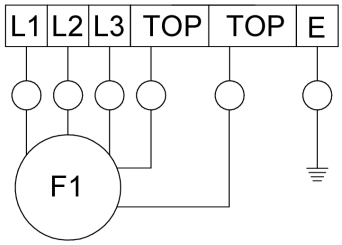

L1 - BLACK
L2 - BLUE
L3 - BROWN
TOP - PURPLE
TOP - PINK
E - GREEN/YELLOW
F1 - FAN MOTOR

efficacy
Cubic Unit Coolers

© Copyright HC Heat-Exchangers (PTY) Ltd.

Subject to change without prior notice.

HPe500

COMMERCIAL CUBIC UNIT COOLER

PERFORMANCE DATA							TECHNICAL DATA									
Series - HPe500	Fins Per Inch (Spacing - mm)	Capacity @ SC2 - kW	Capacity @ SC3 - kW	Air Flow - m^3/hr	Air Throw - m [1]	Face Velocity - m/s	Fans - Qty x Dia - mm	Fan Model - ebm-papst	Coil Internal Volume - lt	Coil Surface Area - m^2	Liquid Connection - Inch [2]	Suction Connection - Inch [3]	Electric Defrost - kW [4]	Unit Mass - kg	Drain Fitting - Inch
501-3DNX0	6FPI (4.2mm)	16.92	12.47	9 252	18	3.0	1x500	S4D500 - DELTA	7.1	34.9	5/8"	1-3/8"	6.3	100	1-1/4" NPSM
501-3FNX0		21.42	15.79	8 964	18	2.9			10.6	51.7	5/8"	1-3/8"	6.3	111	
502-3DNX0		33.98	25.04	18 540	22	3.0	2x500		13.8	69.0	7/8"	1-5/8"	12.6	166	
502-3FNX0		43.10	31.76	17 928	22	2.9			20.6	103.5	7/8"	1-5/8"	12.6	186	
503-3DNX0		49.45	36.44	27 612	24	3.2	3x500		19.2	97.2	1-1/8"	2-1/8"	18.9	224	
503-3FNX0		62.72	46.22	26 676	24	3.1			28.8	145.9	1-1/8"	2-1/8"	18.9	252	
501-3DWX0	4FPI (6.35mm)	14.82	10.92	9 396	19	3.0	1x500	S4D500 - DELTA	7.1	23.8	5/8"	1-3/8"	6.3	99	1-1/4" NPSM
501-3FWX0		19.37	14.28	9 180	19	3.0			10.6	35.7	5/8"	1-3/8"	6.3	109	
502-3DWX0		29.78	21.95	18 792	23	3.0	2x500		13.8	47.6	7/8"	1-5/8"	12.6	163	
502-3FWX0		38.87	28.65	18 360	23	3.0			20.6	71.3	7/8"	1-5/8"	12.6	182	
503-3DWX0		43.11	31.77	28 044	25	3.2	3x500		19.2	67.0	1-1/8"	2-1/8"	18.9	220	
503-3FWX0		56.42	41.58	27 360	25	3.1			28.8	100.5	1-1/8"	2-1/8"	18.9	247	
501-SDNX0	6FPI (4.2mm)	15.36	11.32	7 704	13	2.5	1x500	S4D500 - STAR	7.1	34.9	5/8"	1-3/8"	6.3	100	1-1/4" NPSM
501-SFNX0		18.99	14.00	7 380	13	2.4			10.6	51.7	5/8"	1-3/8"	6.3	111	
502-SDNX0		30.84	22.73	15 372	17	2.5	2x500		13.8	69.0	7/8"	1-5/8"	12.6	166	
502-SFNX0		38.19	28.15	14 760	17	2.4			20.6	103.5	7/8"	1-5/8"	12.6	186	
503-SDNX0		44.83	33.04	22 860	19	2.6	3x500		19.2	97.2	1-1/8"	2-1/8"	18.9	224	
503-SFNX0		55.64	41.01	21 888	19	2.5			28.8	145.9	1-1/8"	2-1/8"	18.9	252	
501-SDWX0	4FPI (6.35mm)	13.53	9.97	7 848	14	2.5	1x500	S4D500 - STAR	7.1	23.8	5/8"	1-3/8"	6.3	99	1-1/4" NPSM
501-SFWX0		17.32	12.76	7 596	14	2.5			10.6	35.7	5/8"	1-3/8"	6.3	109	
502-SDWX0		27.19	20.04	15 696	18	2.5	2x500		13.8	47.6	7/8"	1-5/8"	12.6	163	
502-SFWX0		34.74	25.60	15 228	18	2.5			20.6	71.3	7/8"	1-5/8"	12.6	182	
503-SDWX0		39.46	29.08	23 400	20	2.7	3x500		19.2	67.0	1-1/8"	2-1/8"	18.9	220	
503-SFWX0		50.64	37.32	22 608	20	2.6			28.8	100.5	1-1/8"	2-1/8"	18.9	247	

[1] Measured at 0.25 m/s

[2] Sized to suit nominal expansion valve outlet

[3] Calculated on 15 metre equivalent length (distance between the condensing unit and the unit cooler)

[4] Optional but recommended for rooms below 1°C

efficacy
Cubic Unit Coolers

© Copyright HC Heat-Exchangers (PTY) Ltd.

Subject to change without prior notice.

DIMENSIONAL DRAWINGS

HPe501

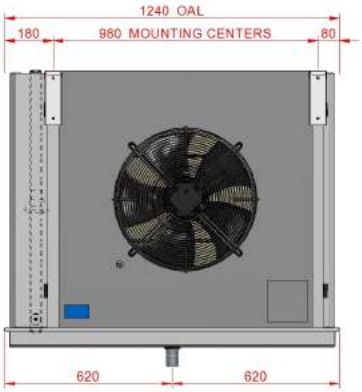

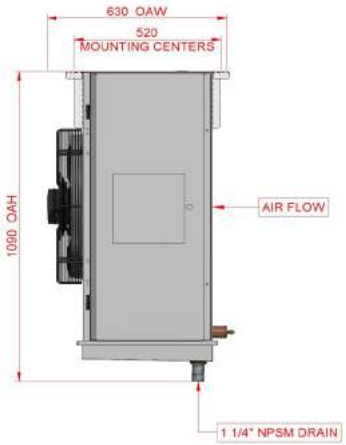

HPe502

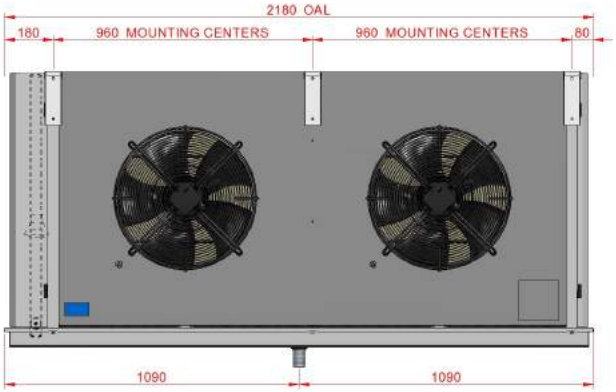

HPe503

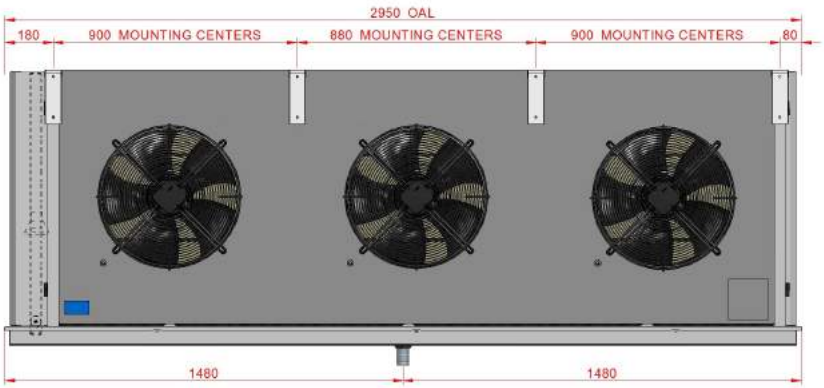

© Copyright HC Heat-Exchangers (PTY) Ltd.

Subject to change without prior notice.

ELEMENT DRAWINGS

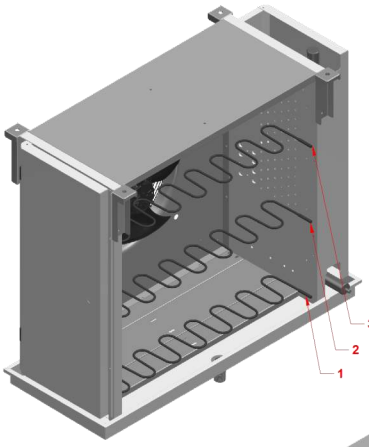

HPe501

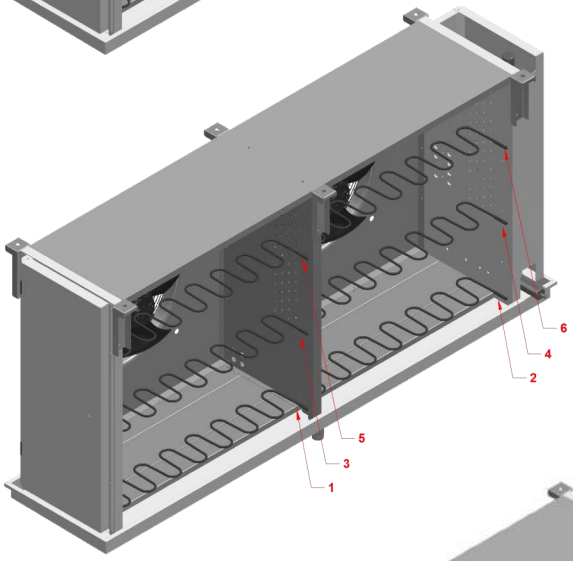

HPe502

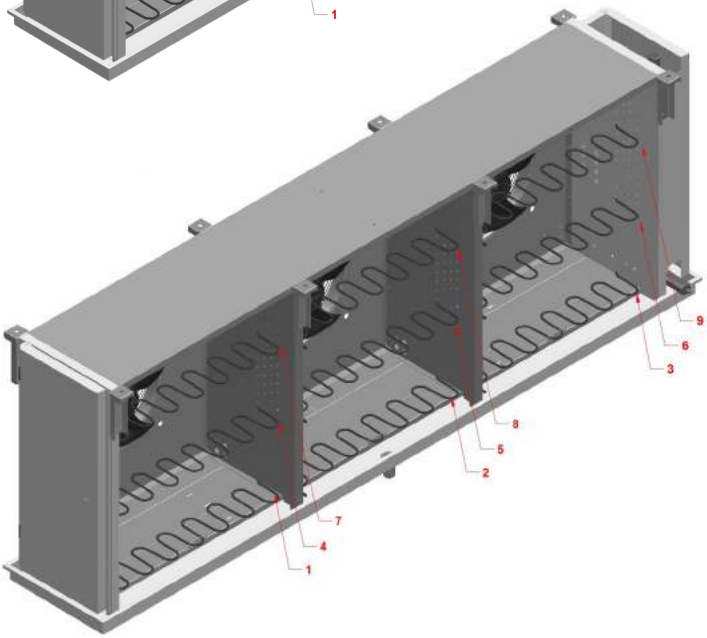

HPe503

© Copyright HC Heat-Exchangers (PTY) Ltd.

Subject to change without prior notice.

ELECTRICAL SPECIFICATIONS

Defrost Technical & Wiring Data						
Model	**Phase**	**Heater**	**Watts**	**Volts**	**Amps**	**Klixon**
501	L1	1+2	4320	230	18.8	14T31(25A)
	L2	3	2160	230	9.4	
502	L1	1+2	4320	230	18.8	14T31(25A)
	L2	3+4	4320	230	18.8	
	L3	5+6	4320	230	18.8	
503	L1	1+2+3	6480	230	28.1	14T31(25A)
	L2	4+5+6	6480	230	28.1	
	L3	7+8+9	6480	230	28.1	

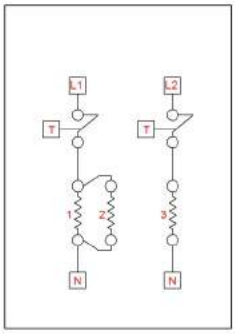

501

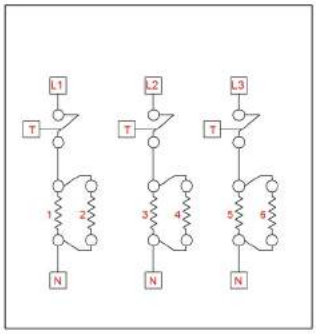

502

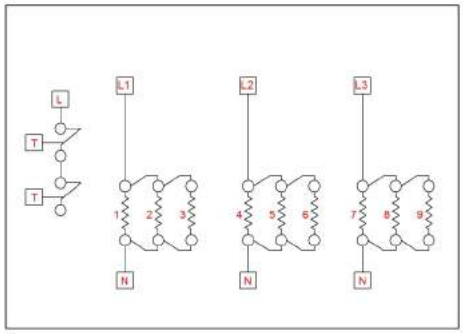

503

CONNECT DEFROST KLIXON INTO DEFROST CONTROL CIRCUIT ON 503

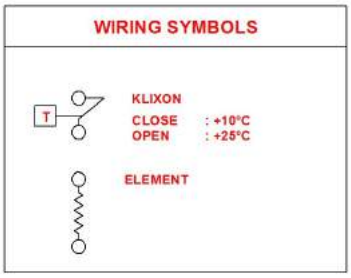

Fan Technical & Wiring Data					
Standard (AC - 3 Phase Delta)					
EBM S4D500 External Rotor Motor					
Diameter mm	**Voltage V**	**Frequency Hz**	**RPM**	**Power W**	**Amperage A**
500	400	50	1390	720	1.41
Optional (EC - 3 Phase)					
EBM S3G500 External Rotor Motor					
Diameter mm	**Voltage V**	**Frequency Hz**	**RPM**	**Power W**	**Amperage A**
500	400	50	1440	1050	1.9
Optional (AC - 1 Phase)					
EBM S4E500 External Rotor Motor					
Diameter mm	**Voltage V**	**Frequency Hz**	**RPM**	**Power W**	**Amperage A**
500	230	50	1300	680	3.00

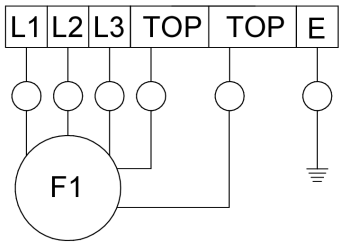

L1 - BLACK
L2 - BLUE
L3 - BROWN
TOP - PURPLE
TOP - PINK
E - GREEN/YELLOW
F1 - FAN MOTOR

© Copyright HC Heat-Exchangers (PTY) Ltd.

Subject to change without prior notice.

HMe630

LIGHT INDUSTRIAL CUBIC UNIT COOLER

PERFORMANCE DATA							TECHNICAL DATA									
Series - HMe	Fins Per Inch (Spacing - mm)	Capacity @ SC2 - kW	Capacity @ SC3 - kW	Air Flow - m^3/hr	Air Throw - m [1]	Face Velocity - m/s	Fans - Qty x Dia - mm	Fan Model - ebm-papst	Coil Internal Volume - lt	Coil Surface Area - m^2	Liquid Connection - Inch [2]	Suction Connection - Inch [3]	Electric Defrost - kW [4]	Unit Mass - kg	Drain Fitting - Inch
631-3DNX0	6FPI (4.2mm)	32.15	23.69	19 296	26	3.6	1x630	S4D630 - DELTA	18.1	89.9	7/8"	1-5/8"	11.5	175	1-1/4" BSPM
631-3FNX0		41.65	30.70	18 828	26	3.5			27.2	134.9	7/8"	1-5/8"	11.5	226	
632-3DNX0		64.59	47.60	38 628	26	3.6	2x630		35.5	179.8	1-1/8"	2-1/8"	23.0	306	
632-3FNX0		83.56	61.58	37 692	26	3.5			53.3	269.7	1-1/8"	2-1/8"	23.0	320	
633-3DNX0		96.88	71.40	57 924	26	3.6	3x630		52.9	269.7	1-3/8"	2-5/8"	34.5	485	
633-3FNX0		125.35	92.38	56 520	26	3.5			79.3	404.6	1-3/8"	2-5/8"	34.5	502	
631-3DWX0	4FPI (6.35mm)	27.90	20.56	19 512	26	3.6	1x630	S4D630 - DELTA	18.1	62.0	7/8"	1-5/8"	11.5	171	1-1/4" BSPM
631-3FWX0		37.15	27.38	19 188	26	3.6			27.2	93.0	7/8"	1-5/8"	11.5	216	
632-3DWX0		56.08	41.33	39 024	26	3.6	2x630		35.5	123.9	1-1/8"	2-1/8"	23.0	291	
632-3FWX0		74.59	54.97	38 340	26	3.6			53.3	185.9	1-1/8"	2-1/8"	23.0	302	
633-3DWX0		84.13	62.00	58 572	26	3.6	3x630		52.9	185.9	1-3/8"	2-5/8"	34.5	460	
633-3FWX0		111.89	82.46	57 528	26	3.6			79.3	278.9	1-3/8"	2-5/8"	34.5	472	
631-SDNX0	6FPI (4.2mm)	29.16	21.49	15 768	26	2.9	1x630	S4D630 - STAR	18.1	89.9	7/8"	1-5/8"	11.5	175	1-1/4" BSPM
631-SFNX0		36.81	27.13	15 228	26	2.8			27.2	134.9	7/8"	1-5/8"	11.5	226	
632-SDNX0		58.56	43.16	31 536	26	2.9	2x630		35.5	179.8	1-1/8"	2-1/8"	23.0	306	
632-SFNX0		73.85	54.43	30 456	26	2.8			53.3	269.7	1-1/8"	2-1/8"	23.0	320	
633-SDNX0		87.84	64.74	47 304	26	2.9	3x630		52.9	269.7	1-3/8"	2-5/8"	34.5	485	
633-SFNX0		111.11	81.89	45 684	26	2.8			79.3	404.6	1-3/8"	2-5/8"	34.5	502	
631-SDWX0	4FPI (6.35mm)	25.50	18.79	16 020	26	3.0	1x630	S4D630 - STAR	18.1	62.0	7/8"	1-5/8"	11.5	171	1-1/4" BSPM
631-SFWX0		33.24	24.50	15 624	26	2.9			27.2	93.0	7/8"	1-5/8"	11.5	216	
632-SDWX0		51.24	37.76	32 040	26	3.0	2x630		35.5	123.9	1-1/8"	2-1/8"	23.0	291	
632-SFWX0		66.70	49.16	31 212	26	2.9			53.3	185.9	1-1/8"	2-1/8"	23.0	302	
633-SDWX0		77.03	56.77	48 060	26	3.0	3x630		52.9	185.9	1-3/8"	2-5/8"	34.5	460	
633-SFWX0		100.40	73.99	46 836	26	2.9			79.3	278.9	1-3/8"	2-5/8"	34.5	472	

[1] Measured at 0.25 m/s

[2] Sized to suit nominal expansion valve outlet

[3] Calculated on 15 metre equivalent length (distance between the condensing unit and the unit cooler)

[4] Optional but recommended for rooms below 1°C

efficacy
Cubic Unit Coolers

© Copyright HC Heat-Exchangers (PTY) Ltd.

Subject to change without prior notice.

DIMENSIONAL DRAWINGS

HMe631

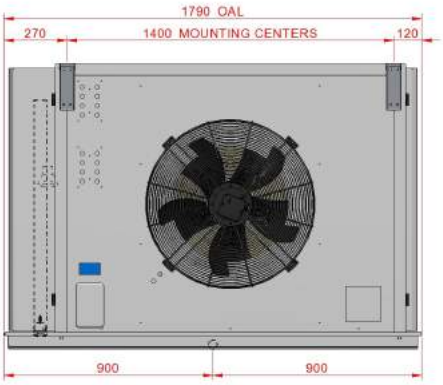

HMe632

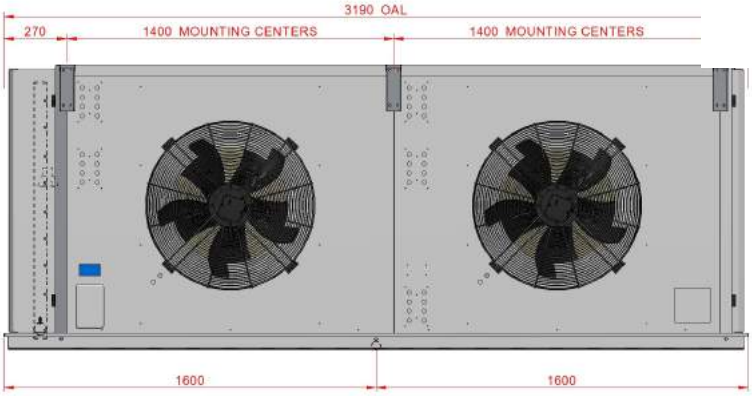

HMe633

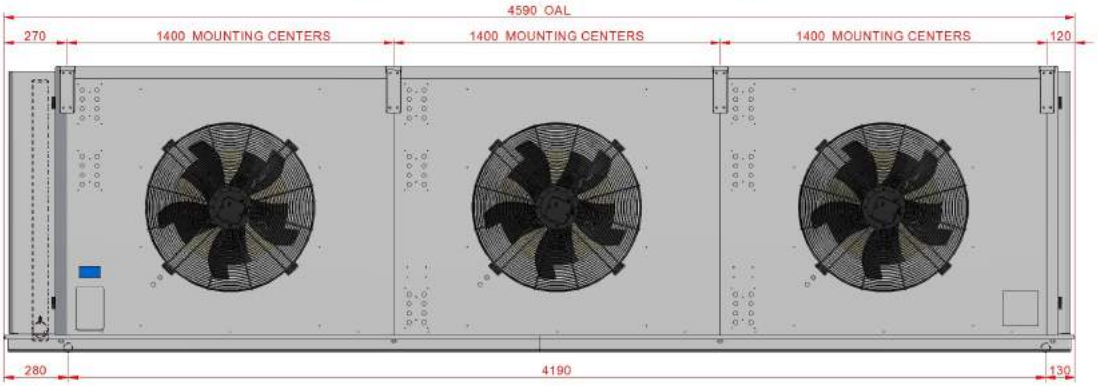

ELEMENT DRAWINGS

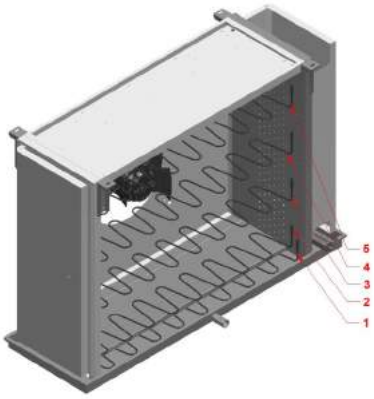

HMe631

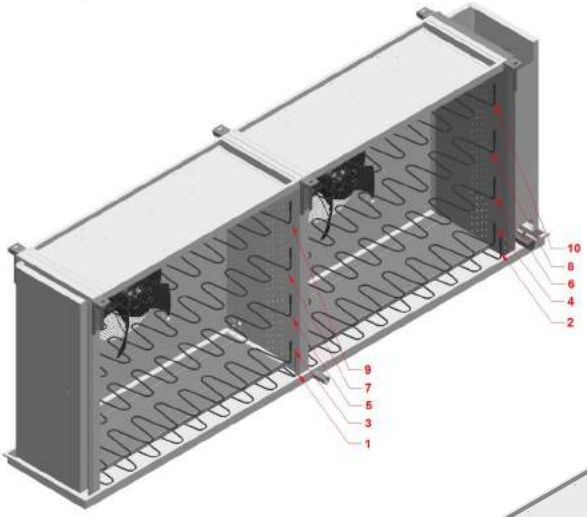

HMe632

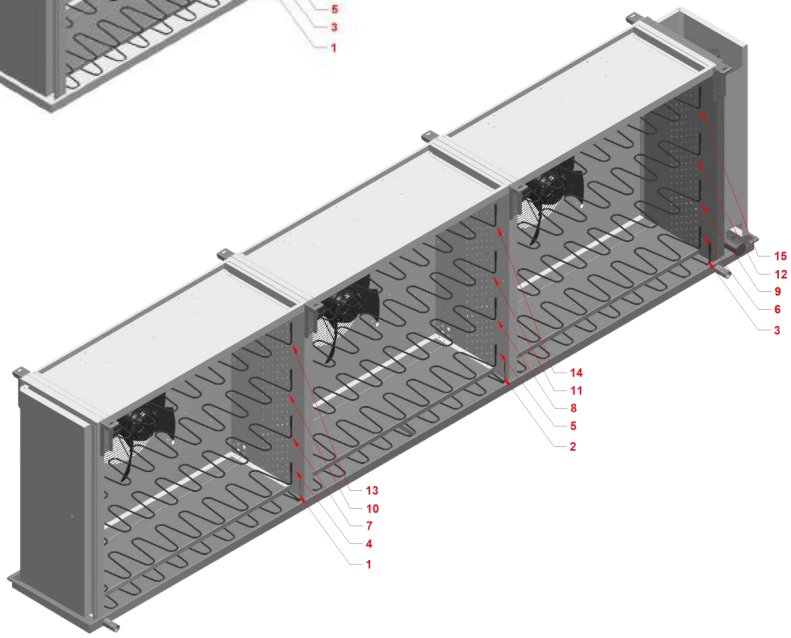

HMe633

© Copyright HC Heat-Exchangers (PTY) Ltd.

Subject to change without prior notice.

ELECTRICAL SPECIFICATIONS

Defrost Technical & Wiring Data						
Model	**Phase**	**Heater**	**Watts**	**Volts**	**Amps**	**Klixon**
631	L1	1+2	4600	230	20.0	14T31(25A)
	L2	3+4	4600	230	20.0	
	L3	DT	2300	230	10.0	
632	L1	1+2+3	6900	230	30.0	14T31(25A)
	L2	4+5+6	6900	230	30.0	
	L3	7+8+DT+DT	9200	230	40.0	
633	L1	1+2+3+4+5	11500	230	50.0	14T31(25A)
	L2	6+7+8+9+10	11500	230	50.0	
	L3	11+12+DT+DT+DT	11500	230	50.0	

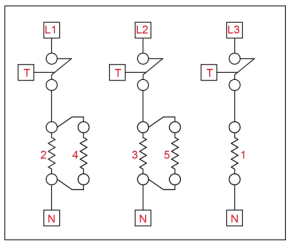

631

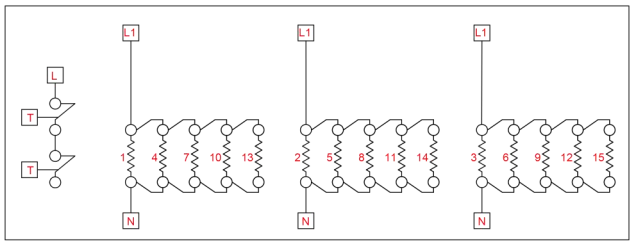

633

CONNECT DEFROST KLIXON INTO
DEFROST CONTROL CIRCUIT ON 632 & 633

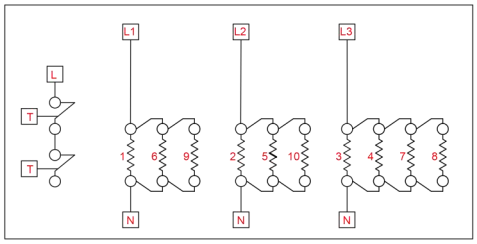

632

CONNECT DEFROST KLIXON INTO
DEFROST CONTROL CIRCUIT ON 632 & 633

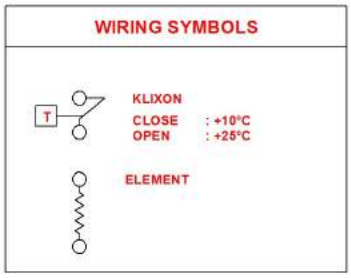

Fan Technical & Wiring Data					
Standard (Delta)					
EBM S4D630 External Rotor Motor					
Diameter mm	**Voltage V**	**Frequency Hz**	**RPM**	**Power W**	**Amperage A**
630	400	50	1320	2630	4.78
Optional (Star)					
EBM S4D630 External Rotor Motor					
Diameter mm	**Voltage V**	**Frequency Hz**	**RPM**	**Power W**	**Amperage A**
630	400	50	1050	1750	2.95
Optional (EC)					
EBM S3G630 External Rotor Motor					
Diameter mm	**Voltage V**	**Frequency Hz**	**RPM**	**Power W**	**Amperage A**
630	400	50	1510	3200	5

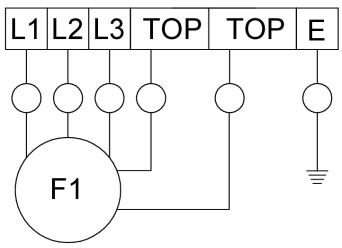

L1 - BLACK
L2 - BLUE
L3 - BROWN
TOP - PURPLE
TOP - PINK
E - GREEN/YELLOW
F1 - FAN MOTOR

efficacy
Cubic Unit Coolers

© Copyright HC Heat-Exchangers (PTY) Ltd.

Subject to change without prior notice.

efficacy

Slim Type Unit Coolers

HC HEAT-EXCHANGERS

Real HVACR people who understand your needs.

Slim Type Unit Cooler Range

Series	Application	Nom. Capacity @ SC2	Pg
HTe250	*Compact Slim Coolers*	*0.5 - 3.6 kw*	*35*
RONDO	*Compact Slim Coolers*	*0.9 - 6.2 kW*	*39*
HCe300	*Light Commercial Slim Coolers*	*1.5 - 9.9 kW*	*42*
HDe300	*Light Commercial Slim Coolers*	*2.2 - 13.9 kW*	*46*

The all new *efficacy* range of unit coolers from HC Heat-Exchangers

The very best kW/cost ratio is now obtainable with ***efficacy*** unit coolers, featuring:

- ***INNER GROOVE*** copper tube technology ensures efficient evaporation of the new refrigerants across all load conditions. The **improvement in heat transfer** is due to the **50-60% increase in internal surface** area when compared to plain tube. The tube-side heat transfer coefficient for inner-groove tubing is as much as **2 ½ - 3 times** higher than traditional plain tube.
- ***STAGGERED TUBE*** pattern with ***WAVERED FIN*** boosts air-side heat transfer performance, reducing dehumidification and frost formation.
- ***OPTIMISED CIRCUITING*** and ***ENHANCED DISTRIBUTOR NOZZLE*** ensures even distribution and greater operating stability. As a result frost formation is more uniform across the coil, leading to less frequent and shorter defrost regimes.
- Completely redesigned and reconfigured **EXTERNAL ZIG-ZAG** heaters offer reduced power input with **improved defrost efficiency**. Moving heaters externally also results In **more live coil tubes**, further enhancing overall **coil performance**.
- All combined the ***efficacy*** unit coolers offer ***HIGHER CAPACITY*** in all operating conditions for a ***WIDER RANGE OF REFRIGERANTS.***

NOMENCLATURE

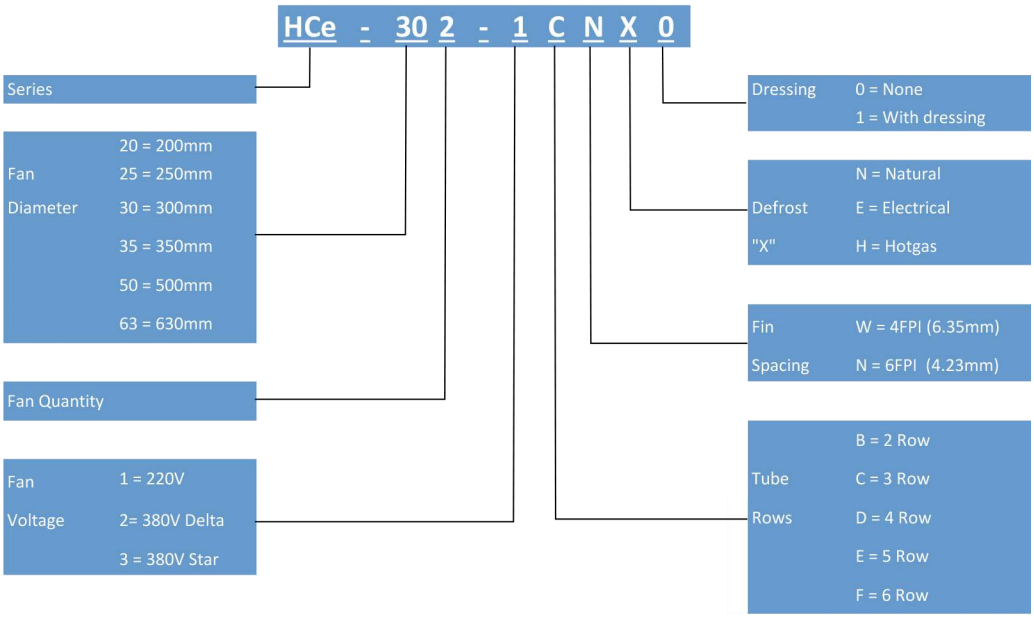

© Copyright HC Heat-Exchangers (PTY) Ltd.

Subject to change without prior notice.

HTe250

COMPACT SLIM COOLER

PERFORMANCE DATA						
Series	Fins Per Inch (Spacing - mm)	Capacity @ SC2 - kW	Capacity @ SC3 - kW	Air Flow - m^3/hr	Air Throw - m [1]	Face Velocity - m/s
251-1BNX0	6FPI (4.2mm)	0.54	0.40	576	10	3.2
251-1CNX0		0.69	0.51	468	9	2.8
251-1DNX0		0.82	0.60	432	8	2.5
252-1BNX0		1.21	0.89	1 152	10	3.2
252-1CNX0		1.60	1.18	972	9	2.8
252-1DNX0		1.80	1.33	864	8	2.5
253-1BNX0		1.81	1.33	1 692	10	3.2
253-1CNX0		2.40	1.77	1 440	9	2.8
253-1DNX0		2.69	1.98	1 296	8	2.5
254-1BNX0		2.48	1.83	2 268	10	3.2
254-1CNX0		3.15	2.32	1 944	9	2.8
254-1DNX0		3.59	2.65	1 728	8	2.5

TECHNICAL DATA								
Fans - Qty x Dia - mm	Fan Model - ebm-papst	Coil Internal Volume - lt	Coil Surface Area - m^2	Liquid Connection - Inch [2]	Suction Connection - Inch [3]	Electric Defrost - kW	Unit Mass - kg	Drain Fitting - Inch
1x250	M4Q 045 16W 250mm	0.3	1.0	3/8"	3/8"	0.2	5	1/2" BSPM
		0.5	1.5	3/8"	3/8"	0.2	6	
		0.6	1.9	3/8"	3/8"	0.2	6	
2x250		0.6	1.9	1/2"	1/2"	0.4	8	
		0.9	2.9	1/2"	1/2"	0.4	8	
		1.2	3.9	1/2"	1/2"	0.4	9	
3x250		0.9	2.9	1/2"	1/2"	0.5	11	
		1.3	4.4	1/2"	1/2"	0.5	12	
		1.7	5.8	1/2"	1/2"	0.5	12	
4x250		1.1	3.9	1/2"	1/2"	0.7	14	
		1.7	5.8	1/2"	1/2"	0.7	15	
		2.3	7.8	1/2"	1/2"	0.7	16	

[1] Measured at 0.25 m/s

[2] Sized to suit nominal expansion valve outlet

[3] Calculated on 15 metre equivalent length (distance between the condensing unit and the unit cooler)

[4] Optional but recommended for rooms below 1°C

efficacy
Slim Type Unit Coolers

© Copyright HC Heat-Exchangers (PTY) Ltd.

Subject to change without prior notice.

DIMENSIONAL DRAWINGS

HTe251

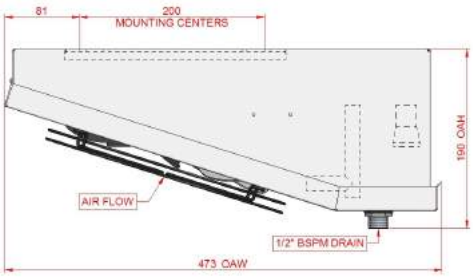

HTe252

HTe253

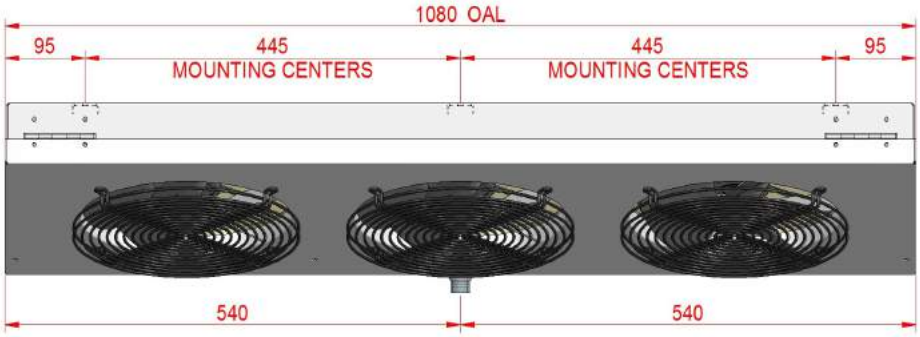

HTe254

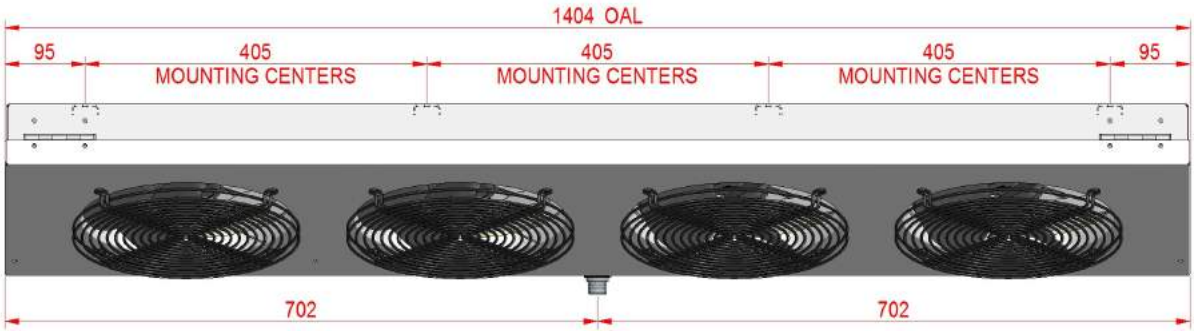

© Copyright HC Heat-Exchangers (PTY) Ltd.

Subject to change without prior notice.

ELEMENT DRAWINGS

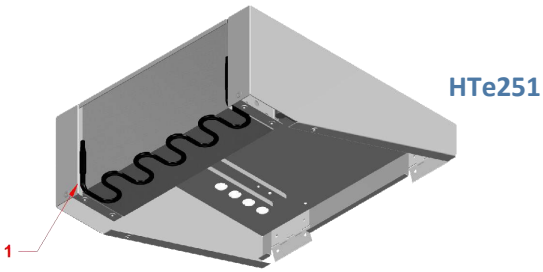

HTe251

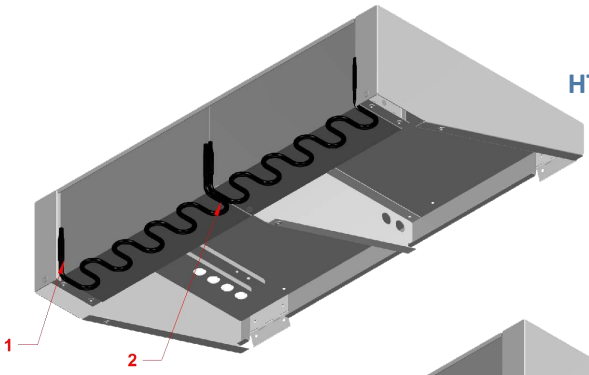

HTe252

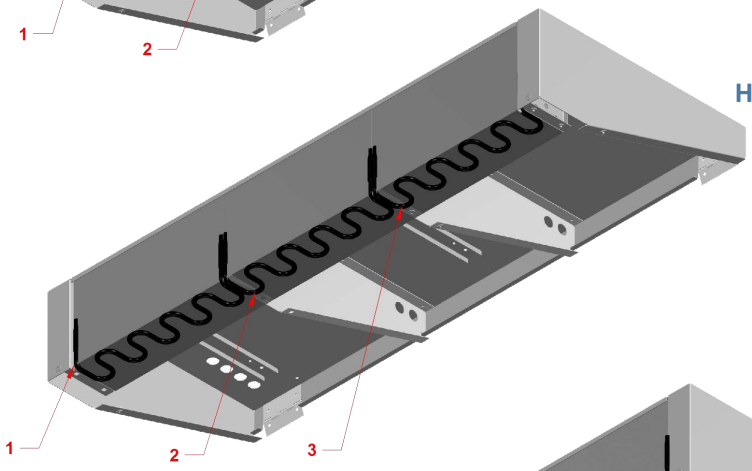

HTe253

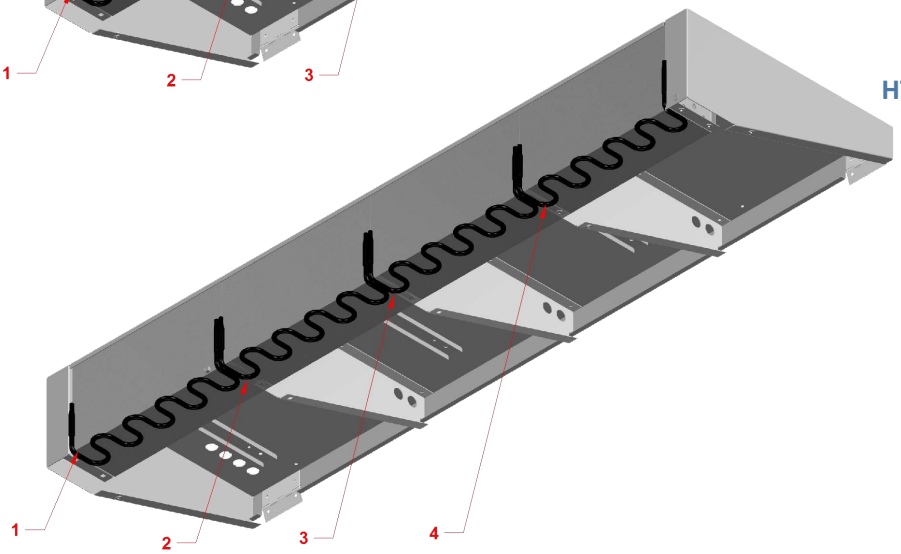

HTe254

© Copyright HC Heat-Exchangers (PTY) Ltd.

Subject to change without prior notice.

ELECTRICAL SPECIFICATIONS

Defrost Technical & Wiring Data						
Model	Phase	Heater	Watts	Volts	Amps	Klixon
251	L1	1	180	230	0.8	37T31(25A)
252	L1	1+2	360	230	1.6	37T31(25A)
253	L1	1+2+3	540	230	2.4	37T31(25A)
254	L1	1+2+3+4	720	230	3.2	37T31(25A)

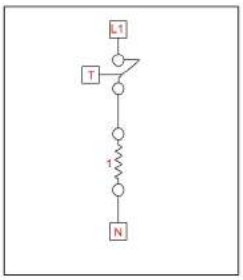

251

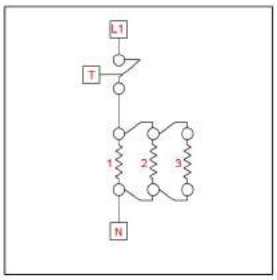

253

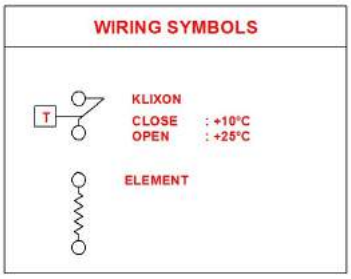

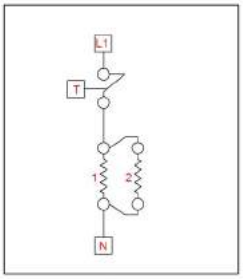

252

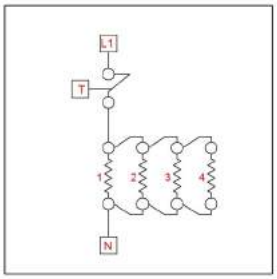

254

Fan Technical & Wiring Data					
Standard (Shaded Pole)					
EBM 16W Shaded Pole Motor & 250Ø 28° Form 'V' Fan Blade					
Diameter mm	Voltage V	Frequency Hz	RPM	Power W	Amperage A
250	230	50	1300	60	0.42
Optional					
N/A					

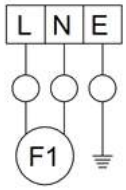

L - BLUE
N - BROWN
E - GREEN/YELLOW
F1 - FAN MOTOR

© Copyright HC Heat-Exchangers (PTY) Ltd.

Subject to change without prior notice.

RONDO

COMPACT SLIM COOLER

PERFORMANCE DATA						
Series	Fins Per Inch (Spacing - mm)	Capacity @ SC2 - kW	Capacity @ SC3 - kW	Air Flow - m^3/hr	Air Throw - m [1]	Face Velocity - m/s
RONDO 140-C	6FPI (4.2mm)	0.95	0.70	792		2.4
RONDO 240-C		1.27	0.94	720		2.2
RONDO 340-C		1.49	1.10	792		1.9
RONDO 440-C		1.62	1.19	828		1.7
RONDO 400-C		2.00	1.47	1 188		2.5
RONDO 500-C		2.71	2.00	1 476		2.1
RONDO 700-C		3.19	2.35	1 656		1.8
RONDO 800-C		3.56	2.59	2 880		2.5
RONDO 900-C		4.69	3.46	2 700		2.3
RONDO 1100-C		5.41	3.99	2 952		2.1
RONDO 1300-C		6.20	4.57	2 736		1.9

TECHNICAL DATA								
Fans - Qty x Dia - mm	Fan Model - ebm-papst	Coil Internal Volume - lt	Coil Surface Area - m^2	Liquid Connection - Inch [2]	Suction Connection - Inch [3]	Electric Defrost - kW	Unit Mass - kg	Drain Fitting - Inch
1x250	16W 250mm	0.6	1.9	3/8"	3/8"	N/A	4	1/2" BSPM
		0.8	2.8	3/8"	3/8"	N/A	5	
		1.0	3.5	1/2"	1/2"	N/A	5	
		1.2	4.2	1/2"	1/2"	N/A	6	
2x250		1.1	3.9	1/2"	1/2"	N/A	7	
		1.7	5.8	1/2"	1/2"	N/A	8	
		2.3	7.8	1/2"	5/8"	N/A	9	
2x300	25W 300mm	1.9	6.4	1/2"	5/8"	N/A	13	
		2.8	9.5	1/2"	5/8"	N/A	14	
		3.5	11.9	1/2"	3/4"	N/A	15	
		4.7	15.9	1/2"	3/4"	N/A	17	

[1] Measured at 0.25 m/s

[2] Sized to suit nominal expansion valve outlet

[3] Calculated on 15 metre equivalent length (distance between the condensing unit and the unit cooler)

efficacy
Slim Type Unit Coolers

© Copyright HC Heat-Exchangers (PTY) Ltd.

Subject to change without prior notice.

DIMENSIONAL DRAWINGS

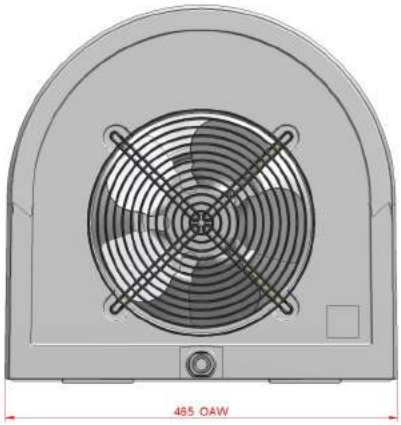

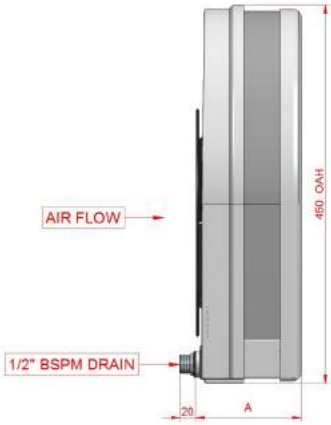

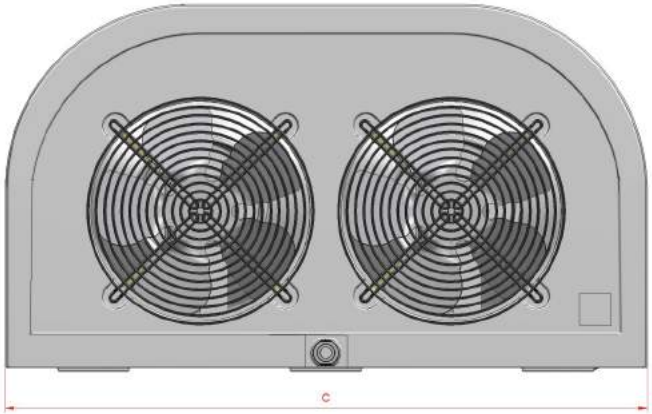

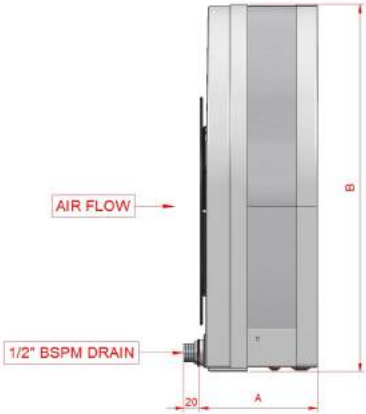

Dimensions	
Model	A
Rondo 140	120
Rondo 240	120
Rondo 340	145
Rondo 440	170

Dimensions			
Model	A	B	C
Rondo 400	137	430	760
Rondo 500	175	430	760
Rondo 700	230	430	760
Rondo 800	230	530	1060
Rondo 900	230	530	1060
Rondo 1100	265	530	1060
Rondo 1300	265	530	1060

© Copyright HC Heat-Exchangers (PTY) Ltd.

Subject to change without prior notice.

ELECTRICAL SPECIFICATIONS

Fan Technical & Wiring Data					
Standard (Shaded Pole)					
EBM 16W Shaded Pole Motor & 250Ø 28° Form 'V' Fan Blade					
Diameter mm	**Voltage V**	**Frequency Hz**	**RPM**	**Power W**	**Amperage A**
250	230	50	1300	60	0.42
Optional					
N/A					

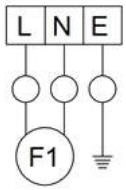

L - BLUE
N - BROWN
E - GREEN/YELLOW
F1 - FAN MOTOR

Fan Technical & Wiring Data					
Standard (Shaded Pole)					
EBM 25W Shaded Pole Motor & 300Ø 28° Form 'V' Fan Blade					
Diameter mm	**Voltage V**	**Frequency Hz**	**RPM**	**Power W**	**Amperage A**
300	230	50	1300	90	0.52
Optional					
N/A					

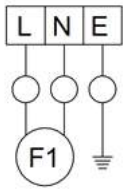

L - BLUE
N - BROWN
E - GREEN/YELLOW
F1 - FAN MOTOR

© Copyright HC Heat-Exchangers (PTY) Ltd.

Subject to change without prior notice.

HCe300

LIGHT COMMERCIAL SLIM COOLER

PERFORMANCE DATA							TECHNICAL DATA								
Series	Fins Per Inch (Spacing - mm)	Capacity @ SC2 - kW	Capacity @ SC3 - kW	Air Flow - m^3/hr	Air Throw - m [1]	Face Velocity - m/s	Fans - Qty x Dia - mm	Fan Model - ebm-papst	Coil Internal Volume - lt	Coil Surface Area - m^2	Liquid Connection - Inch [2]	Suction Connection - Inch [3]	Electric Defrost - kW [4]	Unit Mass - kg	Drain Fitting - Inch
301-1CNX0	6FPI (4.2mm)	1.81	1.33	1,368	8	3.3	1x300	M4Q 045 25W 300mm	1.1	5.2	1/2"	1/2"	0.9	12	3/4" BSPM
301-1ENX0		2.45	1.81	1,116	7	2.7			1.8	8.6	1/2"	1/2"	1.4	14	
302-1CNX0		3.85	2.84	2,736	11	3.3	2x300		2.1	10.3	1/2"	1/2"	1.5	21	
302-1ENX0		4.97	3.66	2,232	10	2.7			3.5	17.2	1/2"	1/2"	2.3	24	
303-1CNX0		5.78	4.26	4,068	14	3.3	3x300		3.1	15.5	1/2"	7/8"	2.2	30	
303-1ENX0		7.44	5.48	3,384	13	2.7			5.2	25.8	1/2"	7/8"	3.3	36	
304-1CNX0		7.71	5.68	5,436	15	3.3	4x300		4.1	20.6	1/2"	7/8"	2.8	39	
304-1ENX0		9.92	7.31	4,500	14	2.7			6.8	34.4	1/2"	7/8"	4.2	45	
301-1CWX0	4FPI (6.35mm)	1.56	1.15	1,476	8	3.6	1x300	M4Q 045 25W 300mm	1.1	3.6	1/2"	1/2"	0.9	12	3/4" BSPM
301-1EWX0		2.27	1.67	1,260	7	3.0			1.8	5.9	1/2"	1/2"	1.4	14	
302-1CWX0		3.37	2.48	2,952	11	3.6	2x300		2.1	7.1	1/2"	1/2"	1.5	20	
302-1EWX0		4.61	3.40	2,484	10	3.0			3.5	11.9	1/2"	1/2"	2.3	24	
303-1CWX0		5.06	3.73	4,392	14	3.6	3x300		3.1	10.7	1/2"	1/2"	2.2	29	
303-1EWX0		6.92	5.10	3,744	13	3.0			5.2	17.8	1/2"	7/8"	3.3	34	
304-1CWX0		6.75	4.97	5,868	15	3.6	4x300		4.1	14.2	1/2"	7/8"	2.8	37	
304-1EWX0		9.23	6.80	4,968	14	3.0			6.8	23.7	1/2"	7/8"	4.2	42	

[1] Measured at 0.25 m/s

[2] Sized to suit nominal expansion valve outlet

[3] Calculated on 15 metre equivalent length (distance between the condensing unit and the unit cooler)

[4] Optional but recommended for rooms below 1°C

efficacy
Slim Type Unit Coolers

© Copyright HC Heat-Exchangers (PTY) Ltd.

Subject to change without prior notice.

DIMENSIONAL DRAWINGS

HCe301

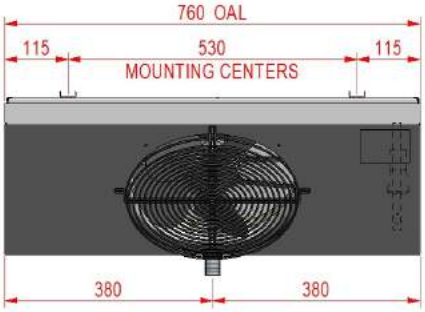

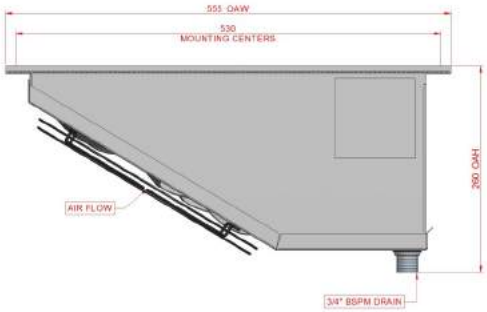

HCe302

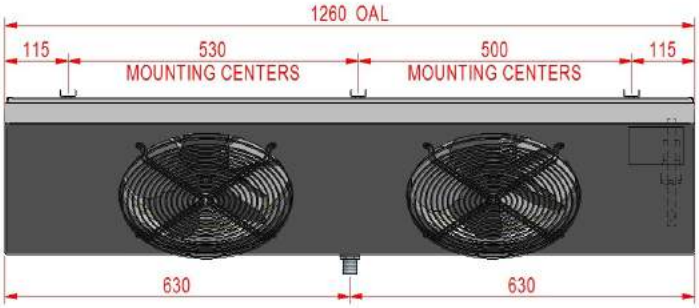

HCe303

HCe304

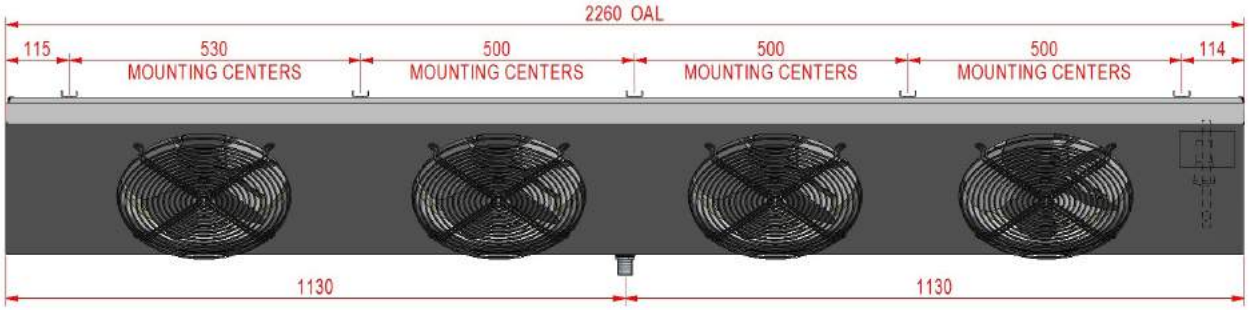

© Copyright HC Heat-Exchangers (PTY) Ltd.

Subject to change without prior notice.

ELEMENT DRAWINGS

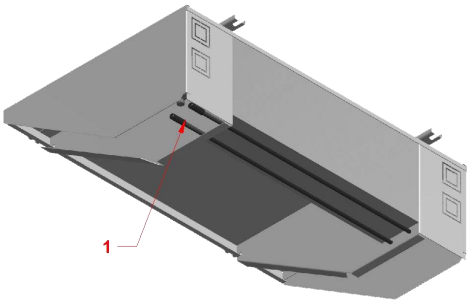

HCe301

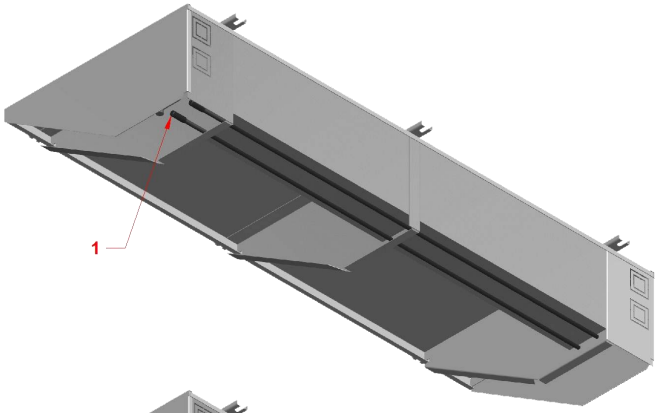

HCe302

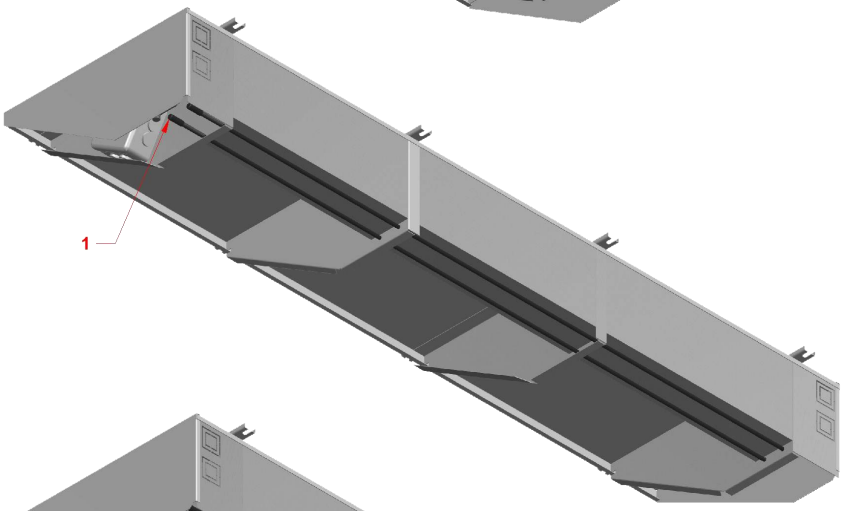

HCe303

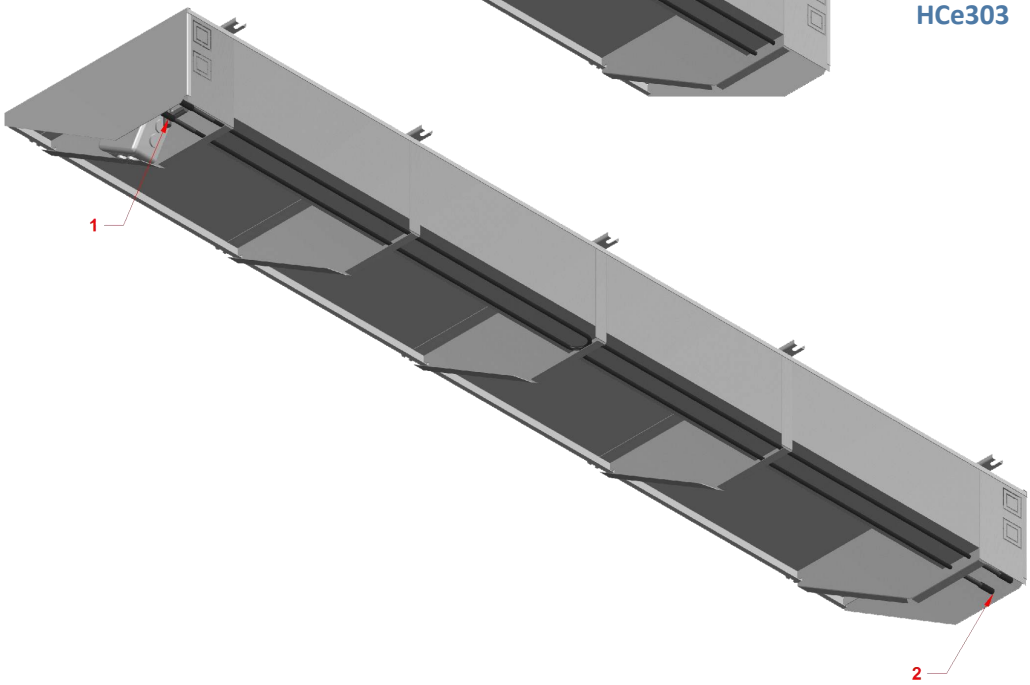

HCe304

© Copyright HC Heat-Exchangers (PTY) Ltd.

Subject to change without prior notice.

ELECTRICAL SPECIFICATIONS

Defrost Technical & Wiring Data						
Model	Phase	Heater	Watts	Volts	Amps	Klixon
301	L1	1	738	230	3.2	37T31(5A)
302	L1	1	1338	230	5.8	14T31(25A)
303	L1	1	1938	230	8.4	14T31(25A)
304	L1	1+2	2676	230	11.6	14T31(25A)

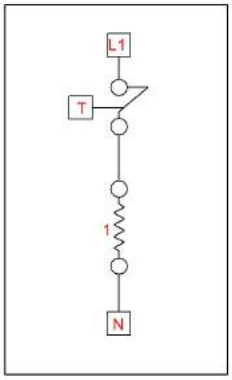

301-303

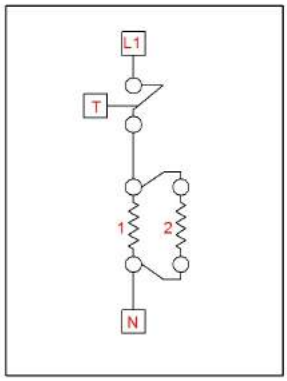

304

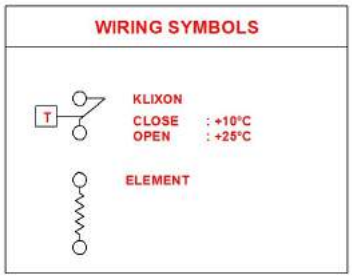

Fan Technical & Wiring Data					
Standard (Shaded Pole)					
EBM 25W Shaded Pole Motor & 300Ø 28° Form 'V' Fan Blade					
Diameter mm	Voltage V	Frequency Hz	RPM	Power W	Amperage A
300	230	50	1300	90	0.52
Optional					
N/A					

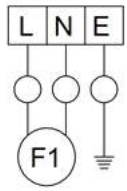

L - BLUE
N - BROWN
E - GREEN/YELLOW
F1 - FAN MOTOR

efficacy
Slim Type Unit Coolers

© Copyright HC Heat-Exchangers (PTY) Ltd.

Subject to change without prior notice.

HDe300

LIGHT COMMERCIAL SLIM COOLER

PERFORMANCE DATA							TECHNICAL DATA									
Series	Fins Per Inch (Spacing - mm)	Capacity @ SC2 - kW	Capacity @ SC3 - kW	Air Flow - m^3/hr	Air Throw - m [1]	Face Velocity - m/s	Fans - Qty x Dia - mm	Fan Model - ebm-papst	Coil Internal Volume - lt	Coil Surface Area - m^2	Liquid Connection - Inch [2]	Suction Connection - Inch [3]	Electric Defrost - kW [4]	Unit Mass - kg	Drain Fitting - Inch
301-1CNX0	6FPI (4.2mm)	2.61	1.92	1,548	8	2.4	1x300	M4Q045 25W 300mm	1.8	8.3	1/2"	1/2"	1.8	16	3/4" BSPM
301-1ENX0		3.46	2.55	1,440	7	2.2			2.9	13.8	1/2"	1/2"	2.3	18	
302-1CNX0		5.22	3.85	3,096	11	2.4	2x300		3.4	16.5	1/2"	7/8"	3.0	26	
302-1ENX0		6.97	5.14	2,880	10	2.2			5.6	27.5	1/2"	7/8"	3.8	31	
303-1CNX0		7.87	5.80	4,680	8	2.4	3x300		5.0	24.8	1/2"	1-1/8"	4.4	37	
303-1ENX0		10.45	7.70	4,320	7	2.2			8.3	41.3	1/2"	1-1/8"	5.5	44	
304-1CNX0		10.54	7.77	6,228	11	2.4	4x300		6.5	33.0	1/2"	1-1/8"	5.6	47	
304-1ENX0		13.93	10.27	5,760	10	2.2			10.9	55.0	5/8"	1-1/8"	7.0	56	
301-1CWX0	4FPI (6.35mm)	2.23	1.64	1,584	8	2.4	1x300	M4Q045 25W 300mm	1.8	5.7	1/2"	1/2"	1.8	15	3/4" BSPM
301-1EWX0		3.17	2.34	1,512	7	2.3			2.9	9.5	1/2"	1/2"	2.3	17	
302-1CWX0		4.52	3.33	3,168	11	2.4	2x300		3.4	11.4	1/2"	7/8"	3.0	25	
302-1EWX0		6.34	4.67	3,024	10	2.3			5.6	19.0	1/2"	7/8"	3.8	30	
303-1CWX0		6.85	5.05	4,752	8	2.4	3x300		5.0	17.1	1/2"	1-1/8"	4.4	35	
303-1EWX0		9.51	7.01	4,536	7	2.3			8.3	28.5	1/2"	1-1/8"	5.5	42	
304-1CWX0		9.08	6.69	6,336	11	2.4	4x300		6.5	22.8	1/2"	1-1/8"	5.6	45	
304-1EWX0		12.77	9.41	6,048	10	2.3			10.9	37.9	5/8"	1-1/8"	7.0	54	

[1] Measured at 0.25 m/s

[2] Sized to suit nominal expansion valve outlet

[3] Calculated on 15 metre equivalent length (distance between the condensing unit and the unit cooler)

[4] Optional but recommended for rooms below 1°C

efficacy
Slim Type Unit Coolers

© Copyright HC Heat-Exchangers (PTY) Ltd.

Subject to change without prior notice.

DIMENSIONAL DRAWINGS

HDe301

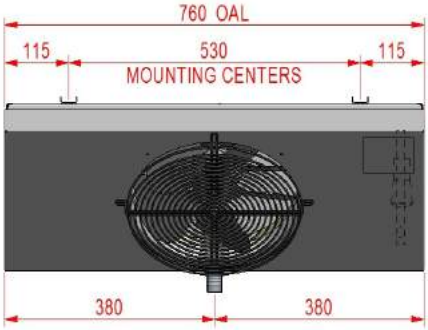

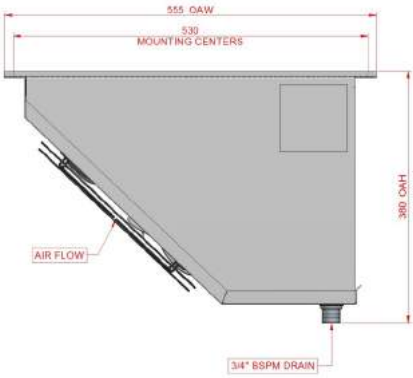

HDe302

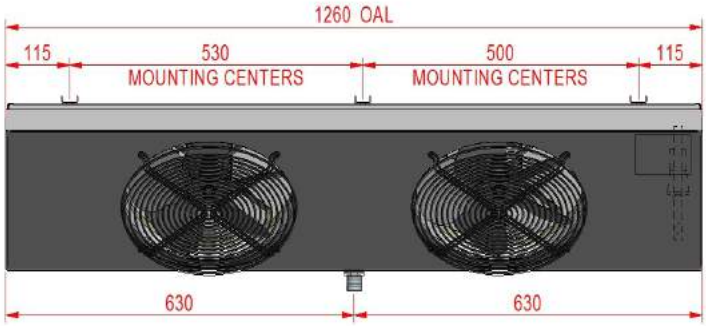

HDe303

HDe304

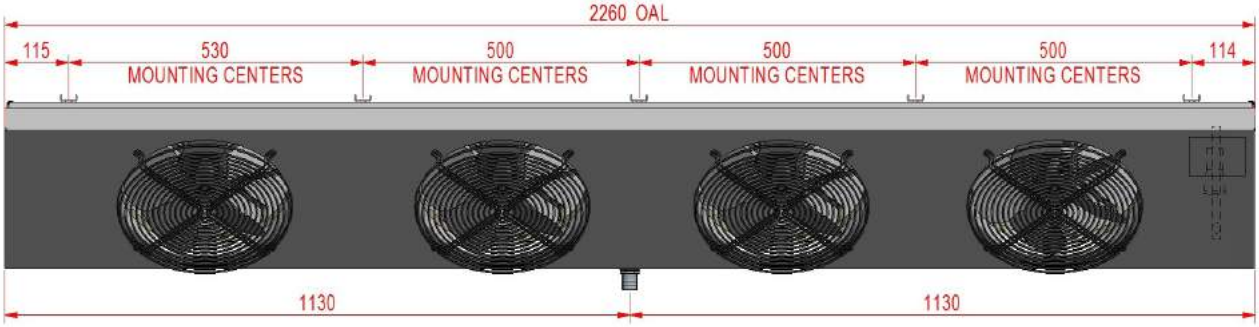

© Copyright HC Heat-Exchangers (PTY) Ltd.

Subject to change without prior notice.

ELEMENT DRAWINGS

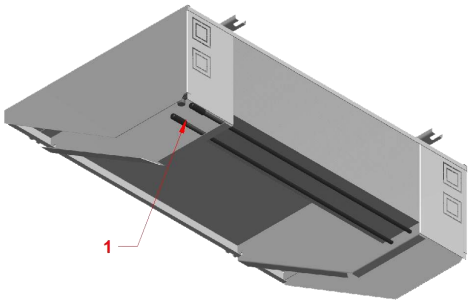

HDe301

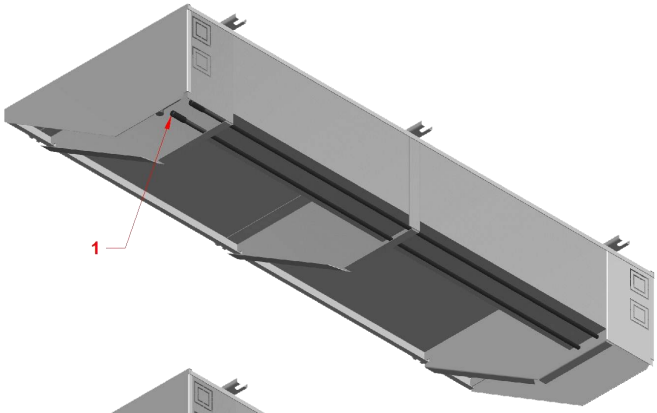

HDe302

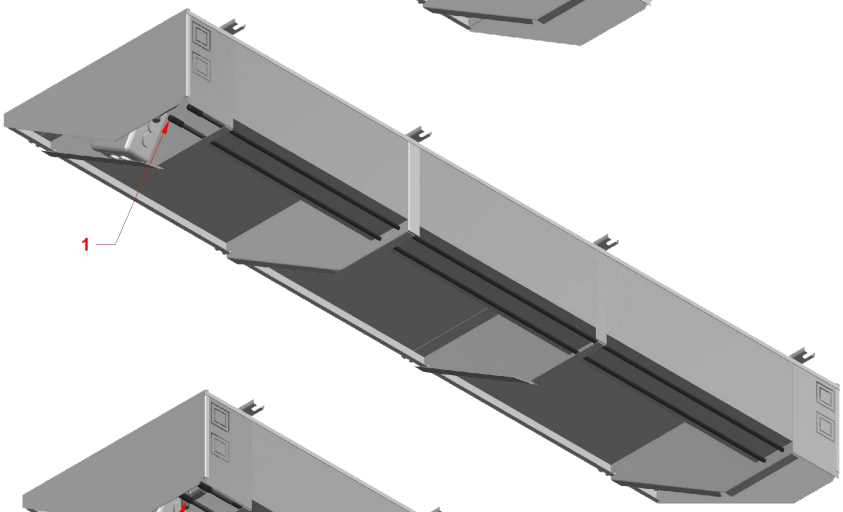

HDe303

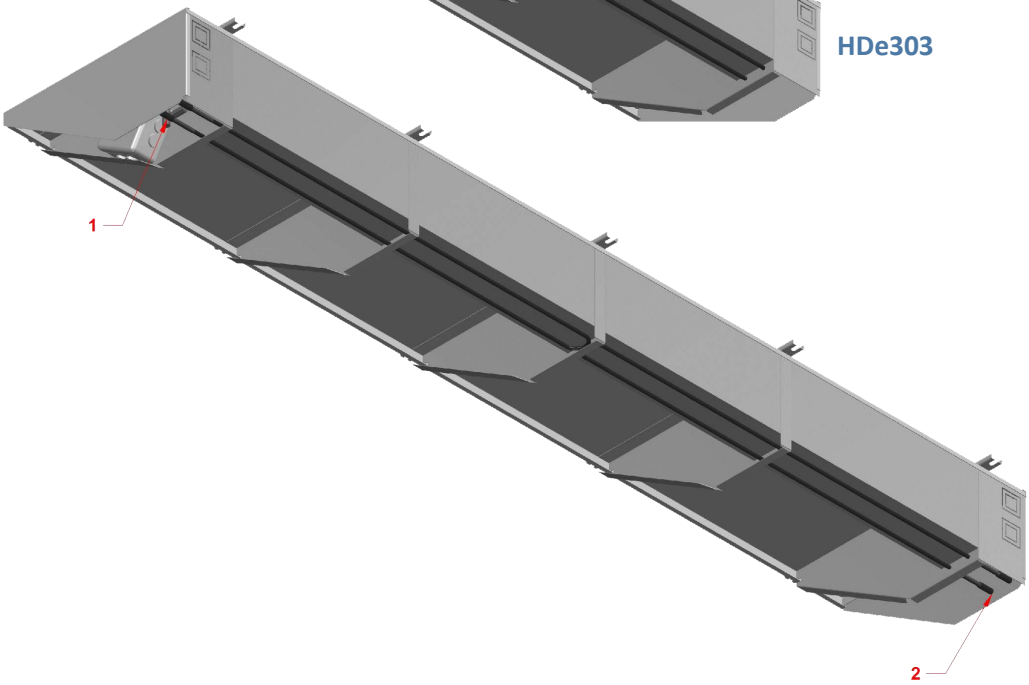

HDe304

Defrost Technical & Wiring Data						
Model	Phase	Heater	Watts	Volts	Amps	Klixon
301	L1	1	738	230	3.2	14T31(25A)
302	L1	1	1338	230	5.8	14T31(25A)
303	L1	1	1938	230	8.4	14T31(25A)
304	L1	1+2	2676	230	11.6	14T31(25A)

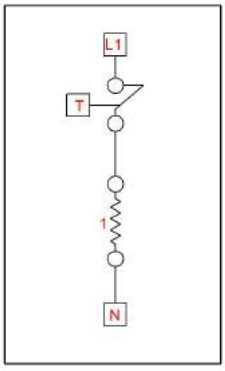

301-303

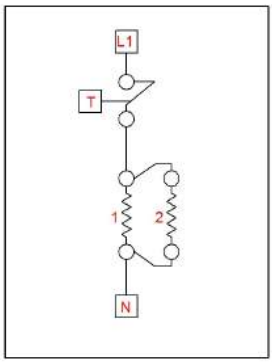

304

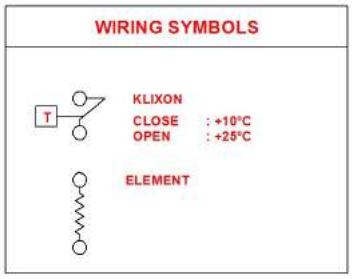

Fan Technical & Wiring Data					
Standard (Shaded Pole)					
EBM 25W Shaded Pole Motor & 300Ø 28° Form 'V' Fan Blade					
Diameter mm	Voltage V	Frequency Hz	RPM	Power W	Amperage A
300	230	50	1300	90	0.52
Optional					
N/A					

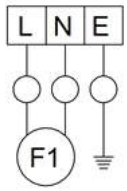

L - BLUE
N - BROWN
E - GREEN/YELLOW
F1 - FAN MOTOR

efficacy

Dual Discharge Coolers

HC HEAT-EXCHANGERS

Real HVACR people who understand your needs.

Dual Discharge Cooler Range

Series	Application	Nom. Capacity @ SC2	Pg
DDe200	*Light Dual Discharge Coolers*	*0.4 - 0.7 kw*	52
DDe250	*Light Dual Discharge Coolers*	*0.9 - 2.9 kW*	52
DDe300	*Light Dual Discharge Coolers*	*1.6 - 12.8 kW*	56
DDe350	*Light Commercial Dual Discharge Coolers*	*3.8 - 27 kW*	60
DDe500	*Commercial Dual Discharge Coolers*	*12 - 63 kW*	64

The all new efficacy range of unit coolers from HC Heat-Exchangers

The very best kW/cost ratio is now obtainable with ***efficacy*** unit coolers, featuring:

- ***INNER GROOVE*** copper tube technology ensures efficient evaporation of the new refrigerants across all load conditions. The **improvement in heat transfer** is due to the **50-60% increase in internal surface** area when compared to plain tube. The tube-side heat transfer coefficient for inner-groove tubing is as much as **2 ½ - 3 times** higher than traditional plain tube.
- ***STAGGERED TUBE*** pattern with ***WAVERED FIN*** boosts air-side heat transfer performance, reducing dehumidification and frost formation.
- ***OPTIMISED CIRCUITING*** and ***ENHANCED DISTRIBUTOR NOZZLE*** ensures even distribution and greater operating stability. As a result frost formation is more uniform across the coil, leading to less frequent and shorter defrost regimes.
- Completely redesigned and reconfigured **EXTERNAL ZIG-ZAG** heaters offer reduced power input with **improved defrost efficiency**. Moving heaters externally also results In **more live coil tubes**, further enhancing overall **coil performance**.
- All combined the ***efficacy*** unit coolers offer ***HIGHER CAPACITY*** in all operating conditions for a ***WIDER RANGE OF REFRIGERANTS.***

NOMENCLATURE

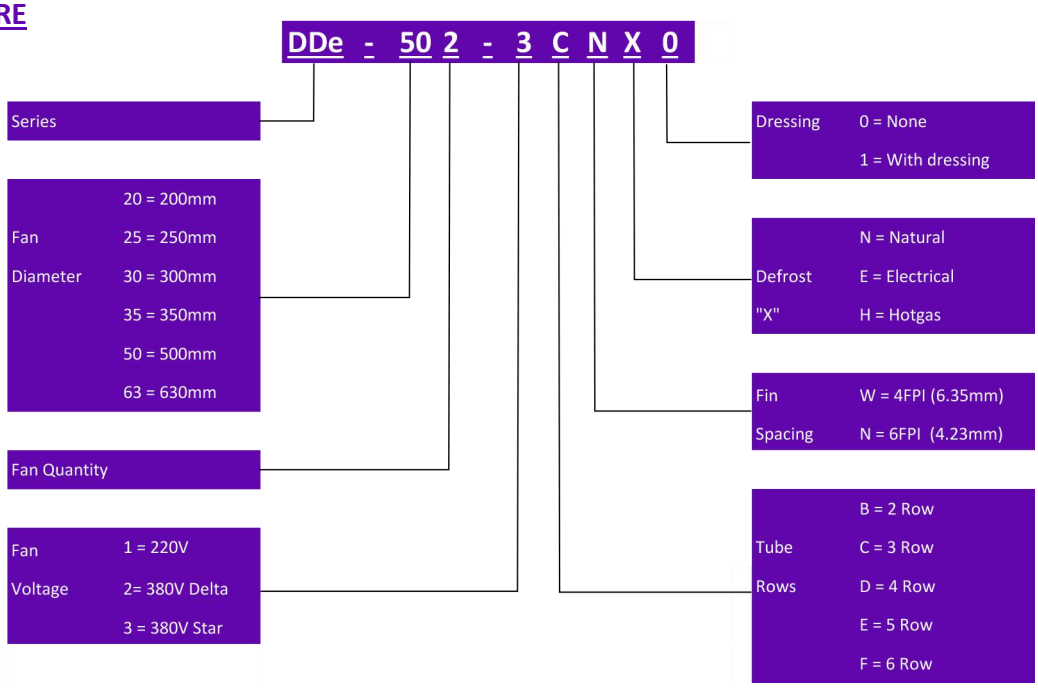

efficacy
Dual Discharge Coolers

© Copyright HC Heat-Exchangers (PTY) Ltd.

Subject to change without prior notice.

DDe200/ 250

LIGHT DUAL DISCHARGE COOLER

PERFORMANCE DATA						
Series	Fins Per Inch (Spacing - mm)	Capacity @ SC2 - kW	Capacity @ SC3 - kW	Air Flow - m^3/hr	Air Throw - m [1]	Face Velocity - m/s
201-1BNX0	6FPI (4.2mm)	0.42	0.31	360	2.0	1.7
201-1CNX0		0.62	0.46	324	1.8	1.6
201-1DNX0		0.69	0.51	324	1.7	1.5
251-1BNX0		0.91	0.67	792	2.7	2.5
251-1CNX0		1.22	0.90	684	2.3	2.2
251-1DNX0		1.34	0.99	612	2.1	2.0
252-1BNX0		1.99	1.47	1 620	2.7	2.4
252-1CNX0		2.54	1.87	1 440	2.3	2.2
252-1DNX0		2.93	2.16	1 296	2.1	2.0

TECHNICAL DATA								
Fans - Qty x Dia - mm	Fan Model - ebm-papst	Coil Internal Volume - lt	Coil Surface Area - m^2	Liquid Connection - Inch [2]	Suction Connection - Inch [3]	Electric Defrost - kW [4]	Unit Mass - kg	Drain Fitting - Inch
1x200	16W 250mm / 10W 200mm	0.4	1.1	3/8"	3/8"	0.3	4	1/2" BSPM
		0.6	1.7	3/8"	3/8"	0.3	5	
		0.7	2.3	3/8"	3/8"	0.3	5	
1x250		0.6	1.7	3/8"	3/8"	0.5	6	
		0.8	2.6	3/8"	3/8"	0.5	6	
		1.1	3.4	1/2"	1/2"	0.5	7	
2x250		1.1	3.7	1/2"	1/2"	0.9	10	
		1.7	5.6	1/2"	5/8"	0.9	11	
		2.3	7.4	1/2"	5/8"	0.9	12	

[1] Measured at 0.25 m/s

[2] Sized to suit nominal expansion valve outlet

[3] Calculated on 15 metre equivalent length (distance between the condensing unit and the unit cooler)

[4] Optional but recommended for rooms below 1°C

efficacy
Dual Discharge Coolers

© Copyright HC Heat-Exchangers (PTY) Ltd.

Subject to change without prior notice.

DIMENSIONAL DRAWINGS

DDe201

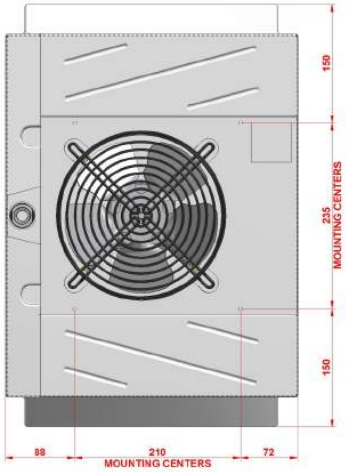

DDe251

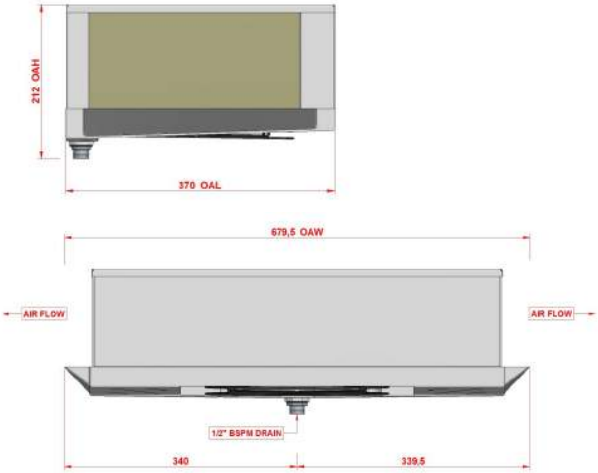

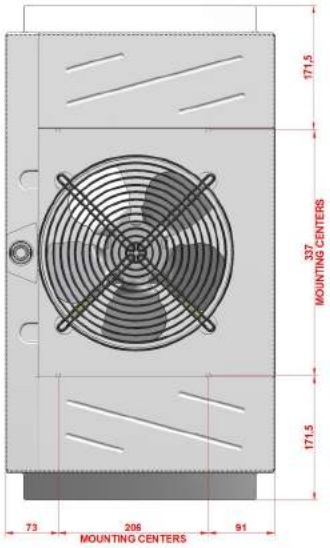

DDe252

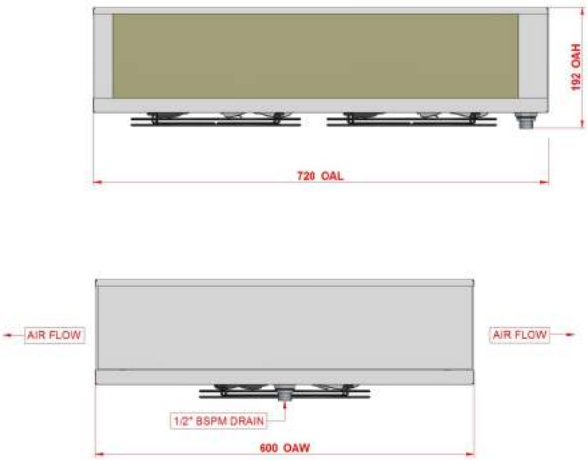

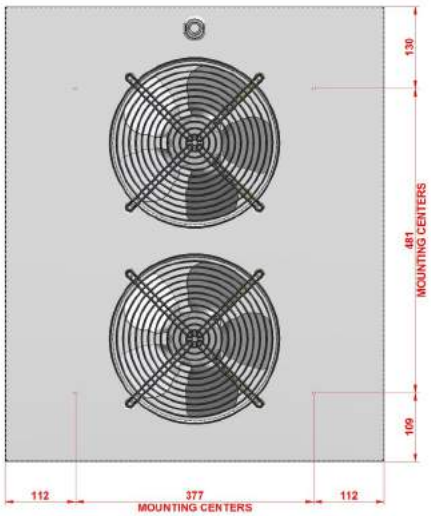

efficacy
Dual Discharge Coolers

© Copyright HC Heat-Exchangers (PTY) Ltd.

Subject to change without prior notice.

ELEMENT DRAWINGS

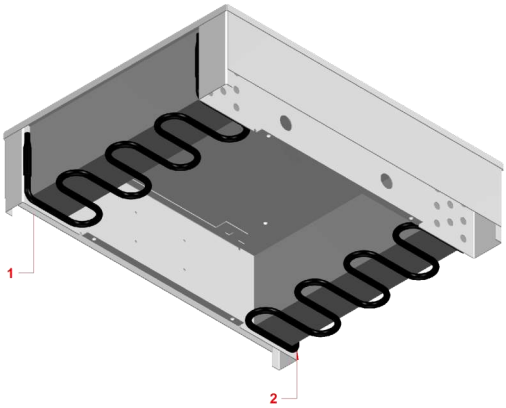

DDe201

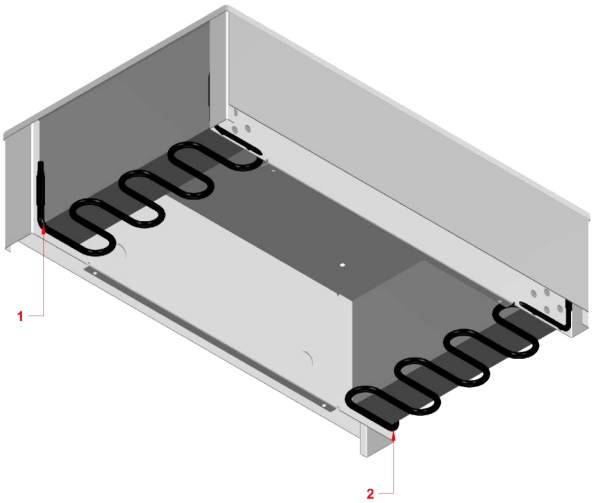

DDe251

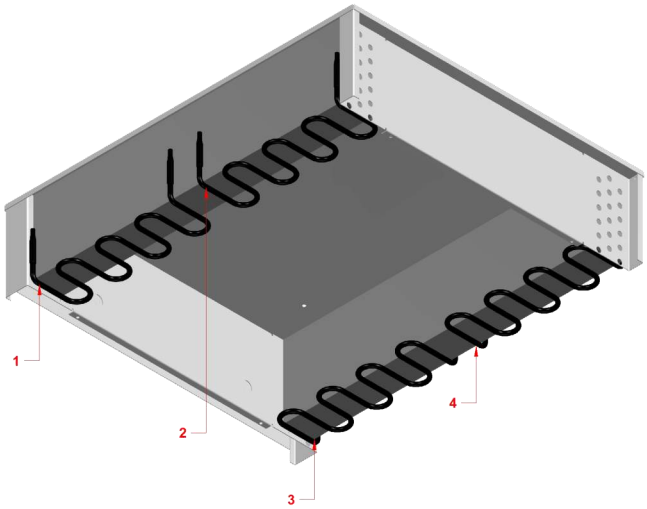

DDe252

© Copyright HC Heat-Exchangers (PTY) Ltd.

Subject to change without prior notice.

ELECTRICAL SPECIFICATIONS

Defrost Technical & Wiring Data						
Model	**Phase**	**Heater**	**Watts**	**Volts**	**Amps**	**Klixon**
201	L1	1	150	230	0.65	37T31(5A)
	L2	2	150	230	0.65	
251	L1	1	225	230	1	37T31(5A)
	L2	2	225	230	1	
252	L1	1+2	450	230	2	37T31(5A)
	L2	3+4	450	230	2	

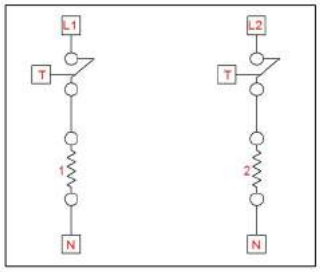

201

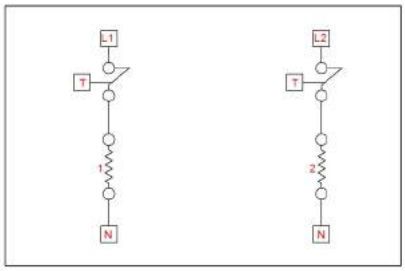

251

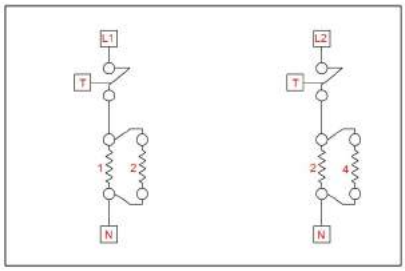

252

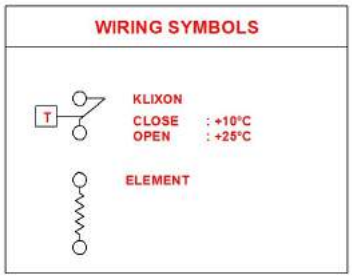

Fan Technical & Wiring Data					
Standard (Shaded Pole)					
EBM 10W Shaded Pole Motor & 200Ø 34° Form 'V' Fan Blade					
Diameter mm	**Voltage V**	**Frequency Hz**	**RPM**	**Power W**	**Amperage A**
200	230	50	1300	36	0.25
EBM 16W Shaded Pole Motor & 250Ø 28° Form 'V' Fan Blade					
Diameter mm	**Voltage V**	**Frequency Hz**	**RPM**	**Power W**	**Amperage A**
250	230	50	1300	60	0.42
Optional					
N/A					

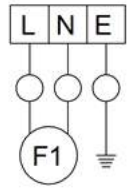

L - BLUE
N - BROWN
E - GREEN/YELLOW
F1 - FAN MOTOR

© Copyright HC Heat-Exchangers (PTY) Ltd.

Subject to change without prior notice.

DDe300

LIGHT DUAL DISCHARGE COOLER

PERFORMANCE DATA							TECHNICAL DATA								
Series	Fins Per Inch (Spacing - mm)	Capacity @ SC2 - kW	Capacity @ SC3 - kW	Air Flow - m^3/hr	Air Throw - m [1]	Face Velocity - m/s	Fans - Qty x Dia - mm	Fan Model - ebm-papst	Coil Internal Volume - lt	Coil Surface Area - m^2	Liquid Connection - Inch [2]	Suction Connection - Inch [3]	Electric Defrost - kW [4]	Unit Mass - kg	Drain Fitting - Inch
301-1BNX0	6FPI (4.2mm)	1.88	1.39	1,584	3.0	2.3	1x300	M4Q 045 34W 300mm	1.2	5.7	1/2"	1/2"	1.1	16	3/4" BSPM
301-1CNX0		2.67	1.97	1,548	2.6	2.3			1.9	8.6	1/2"	1/2"	1.1	17	
301-1DNX0		3.17	2.34	1,512	2.4	2.2			2.5	11.5	1/2"	1/2"	1.1	18	
302-1BNX0		3.94	2.90	3,204	3.0	2.3	2x300		2.4	11.5	1/2"	1/2"	2.2	17	
302-1CNX0		5.34	3.94	3,168	2.6	2.3			3.5	17.2	1/2"	5/8"	2.2	18	
302-1DNX0		6.38	4.70	3,024	2.4	2.2			4.7	22.9	1/2"	5/8"	2.2	19	
303-1BNX0		5.96	4.39	4,788	3.0	2.3	3x300		3.5	17.2	1/2"	7/8"	3.2	34	
303-1CNX0		8.00	5.90	4,680	2.6	2.3			5.2	25.8	1/2"	7/8"	3.2	36	
303-1DNX0		9.57	7.05	4,536	2.4	2.2			6.9	34.4	1/2"	7/8"	3.2	38	
304-1BNX0		7.99	5.89	6,372	3.0	2.3	4x300		4.6	22.9	1/2"	1-1/8"	4.3	39	
304-1CNX0		10.67	7.86	6,228	2.6	2.3			6.9	34.4	1/2"	1-1/8"	4.3	42	
304-1DNX0		12.77	9.41	6,048	2.4	2.2			9.1	45.9	1/2"	1-1/8"	4.3	45	
301-1BWX0	4FPI (6.35mm)	1.62	1.19	1,620	3.0	2.4	1x300	M4Q 045 34W 300mm	1.2	4.0	1/2"	1/2"	1.1	15	3/4" BSPM
301-1CWX0		2.29	1.69	1,584	2.6	2.3			1.9	5.9	1/2"	1/2"	1.1	16	
301-1DWX0		2.80	2.06	1,548	2.4	2.3			2.5	7.9	1/2"	1/2"	1.1	17	
302-1BWX0		3.33	2.45	3,240	3.0	2.4	2x300		2.4	7.9	1/2"	1/2"	2.2	15	
302-1CWX0		4.63	3.41	3,168	2.6	2.3			3.5	11.9	1/2"	5/8"	2.2	16	
302-1DWX0		5.66	4.17	3,132	2.4	2.3			4.7	15.8	1/2"	5/8"	2.2	17	
303-1BWX0		5.07	3.74	4,860	3.0	2.4	3x300		3.5	11.9	1/2"	7/8"	3.2	31	
303-1CWX0		6.95	5.12	4,752	2.6	2.3			5.2	17.8	1/2"	7/8"	3.2	33	
303-1DWX0		8.49	6.26	4,680	2.4	2.3			6.9	23.7	1/2"	7/8"	3.2	35	
304-1BWX0		6.76	4.98	6,444	3.0	2.4	4x300		4.6	15.8	1/2"	1-1/8"	4.3	39	
304-1CWX0		9.27	6.83	6,336	2.6	2.3			6.9	23.7	1/2"	1-1/8"	4.3	42	
304-1DWX0		11.41	8.41	6,228	2.4	2.3			9.1	31.6	1/2"	1-1/8"	4.3	44	

[1] Measured at 0.25 m/s

[2] Sized to suit nominal expansion valve outlet

[3] Calculated on 15 metre equivalent length (distance between the condensing unit and the unit cooler)

[4] Optional but recommended for rooms below 1°C

efficacy
Dual Discharge Coolers

© Copyright HC Heat-Exchangers (PTY) Ltd.

Subject to change without prior notice.

DIMENSIONAL DRAWINGS

DDe301

DDe302

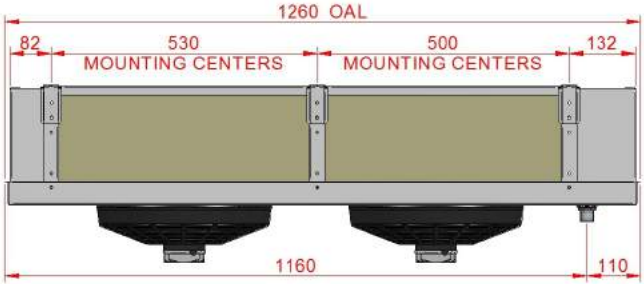

DDe303

DDe304

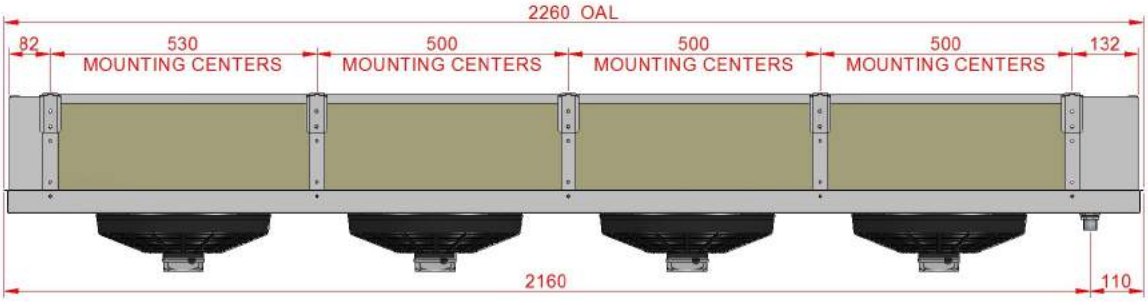

© Copyright HC Heat-Exchangers (PTY) Ltd.

Subject to change without prior notice.

ELEMENT DRAWINGS

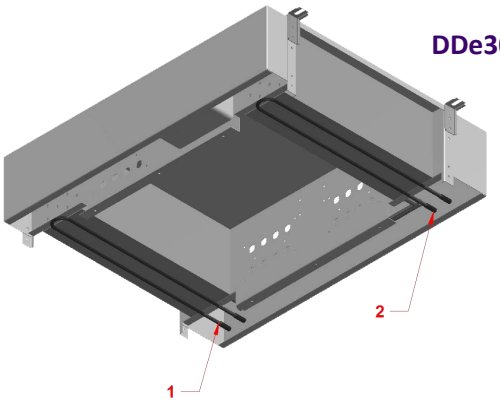

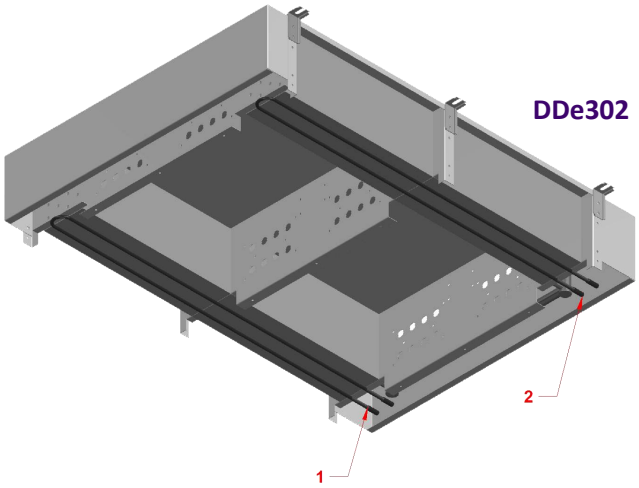

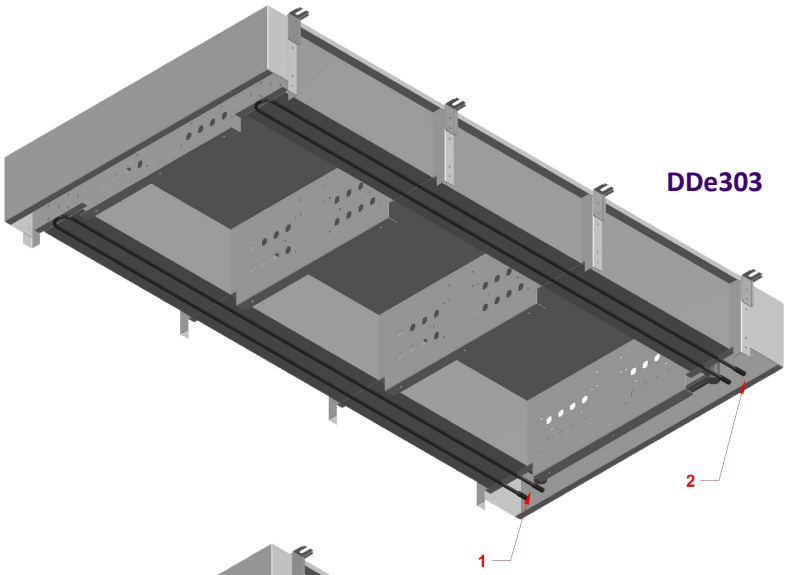

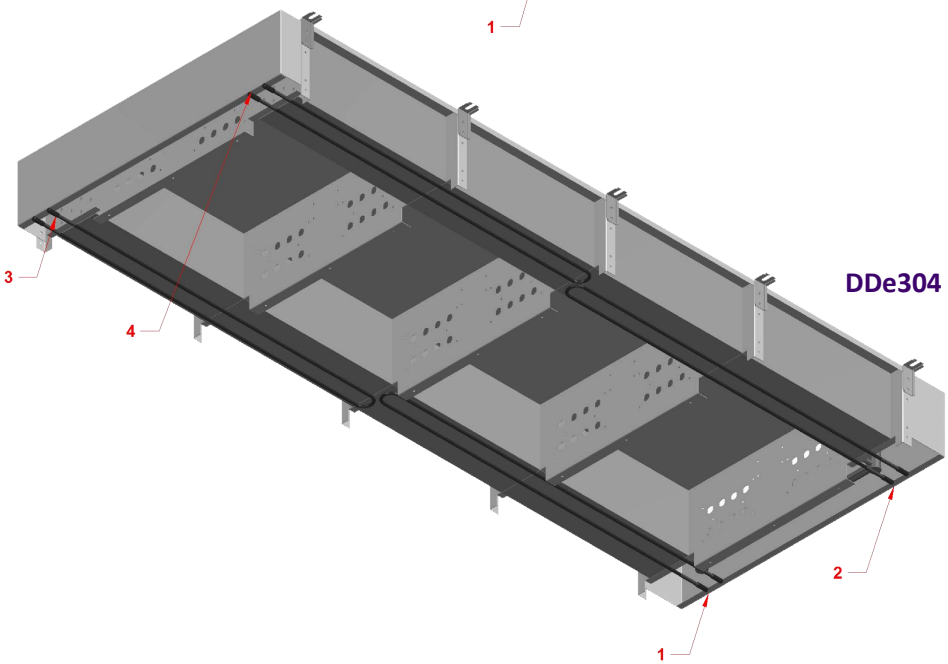

© Copyright HC Heat-Exchangers (PTY) Ltd.

Subject to change without prior notice.

ELECTRICAL SPECIFICATIONS

Defrost Technical & Wiring Data						
Model	**Phase**	**Heater**	**Watts**	**Volts**	**Amps**	**Klixon**
301	L1+L2	1+2	1476	230	6.4	14T31(25A)
302	L1+L2	1+2	2676	230	11.6	14T31(25A)
303	L1+L2	1+2	3876	230	16.8	14T31(25A)
304	L1	1+2	2676	230	11.6	14T31(25A)
	L2	3+4	2676	230	11.6	

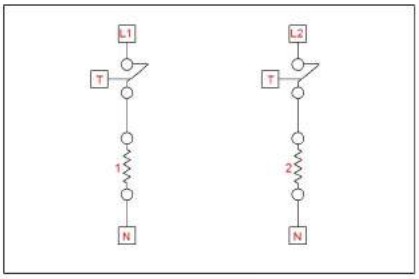

301-303

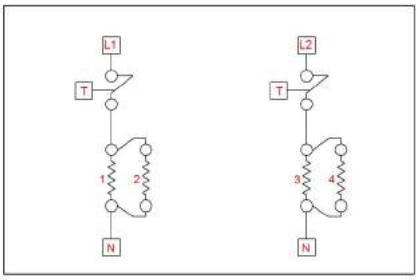

304-305

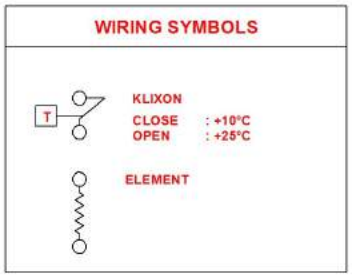

Fan Technical & Wiring Data					
Standard					
EBM 34W Shaded Pole Motor & 300Ø 34° Form 'V' Fan Blade					
Diameter mm	**Voltage V**	**Frequency Hz**	**RPM**	**Power W**	**Amperage A**
300	230	50	1300	110	0.75
Optional					
EBM S4E300 External Rotor Motor					
Diameter mm	**Voltage V**	**Frequency Hz**	**RPM**	**Power W**	**Amperage A**
300	230	50	1400	70	0.32

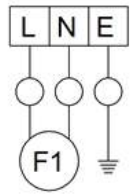

L - BLUE
N - BROWN
E - GREEN/YELLOW
F1 - FAN MOTOR

DDe350

LIGHT COMMERCIAL DUAL DISCHARGE COOLER

PERFORMANCE DATA							TECHNICAL DATA									
Series	Fins Per Inch (Spacing - mm)	Capacity @ SC2 - kW	Capacity @ SC3 - kW	Air Flow - m^3/hr	Air Throw - m [1]	Face Velocity - m/s	Fans - Qty x Dia - mm	Fan Model - ebm-papst	Coil Internal Volume - lt	Coil Surface Area - m^2	Liquid Connection - Inch [2]	Suction Connection - Inch [3]	Electric Defrost - kW [4]	Unit Mass - kg	Drain Fitting - Inch
351-1CNX0	6FPI (4.2mm)	4.40	3.24	2,880	4.0	2.8	1x350	S4E350	2.8	13.0	1/2"	7/8"	1.5	25	3/4" BSPM
351-1DNX0		5.35	3.94	2,808	4.0	2.7			3.7	17.3	1/2"	7/8"	2.5	27	
351-1ENX0		6.07	4.47	2,736	4.0	2.6			4.7	21.7	1/2"	7/8"	2.5	29	
351-1FNX0		6.63	4.89	2,664	4.0	2.6			5.6	26.0	1/2"	7/8"	3.0	31	
352-1CNX0		8.89	6.55	5,760	4.0	2.8	2x350		5.3	26.0	1/2"	1-1/8"	3.0	41	
352-1DNX0		10.78	7.94	5,580	4.0	2.7			7.1	34.7	1/2"	1-1/8"	5.0	45	
352-1ENX0		12.21	9.00	5,436	4.0	2.6			8.9	4.4	1/2"	1-1/8"	5.0	49	
352-1FNX0		13.34	9.83	5,292	4.0	2.6			10.6	52.0	1/2"	1-1/8"	6.0	53	
353-1CNX0		13.33	9.82	8,604	4.0	2.8	3x350		7.8	39.0	5/8"	1-1/8"	4.5	57	
353-1DNX0		16.17	11.92	8,388	4.0	2.7			10.4	52.0	5/8"	1-1/8"	7.5	63	
353-1ENX0		18.37	13.54	8,172	4.0	2.6			13.0	65.0	5/8"	1-3/8"	7.5	69	
353-1FNX0		20.00	14.74	7,920	4.0	2.6			15.6	78.0	5/8"	1-3/8"	9.0	75	
354-1CNX0		17.86	13.16	11,484	4.0	2.8	4x350		10.3	52.0	5/8"	1-3/8"	6.0	73	
354-1DNX0		21.56	15.89	11,160	4.0	2.7			13.8	69.4	5/8"	1-3/8"	10.0	81	
354-1ENX0		24.57	18.11	10,908	4.0	2.6			17.2	86.7	5/8"	1-3/8"	10.0	88	
354-1FNX0		26.75	19.71	10,584	4.0	2.6			20.7	104.0	5/8"	1-3/8'	12.0	96	
351-1CWX0	4FPI (6.35mm)	3.80	2.80	2,916	4.0	2.8	1x350	S4E350	2.8	9.0	1/2"	1/2"	1.5	24	3/4" BSPM
351-1DWX0		4.73	3.49	2,880	4.0	2.8			3.7	12.0	1/2"	7/8"	2.5	26	
351-1EWX0		5.45	4.02	2,808	4.0	2.7			4.7	14.9	1/2"	7/8"	2.5	28	
351-1FWX0		6.05	4.46	2,736	4.0	2.7			5.6	17.9	1/2"	7/8"	3.0	30	
352-1CWX0		7.68	5.66	5,868	4.0	2.8	2x350		5.3	17.9	1/2"	1-1/8"	3.0	39	
352-1DWX0		9.46	6.97	5,724	4.0	2.8			7.1	23.9	1/2"	1-1/8"	5.0	43	
352-1EWX0		10.91	8.04	5,616	4.0	2.7			8.9	29.9	1/2"	1-1/8"	5.0	47	
352-1FWX0		12.17	8.97	5,508	4.0	2.7			10.6	35.9	1/2"	1-1/8"	6.0	51	
353-1CWX0		11.65	8.59	8,784	4.0	2.8	3x350		7.8	26.9	5/8"	1-1/8"	4.5	54	
353-1DWX0		14.31	10.55	8,604	4.0	2.8			10.4	35.9	5/8"	1-1/8"	7.5	60	
353-1EWX0		16.48	12.15	8,424	4.0	2.7			13.0	44.8	5/8"	1-3/8"	7.5	66	
353-1FWX0		18.26	13.46	8,244	4.0	2.7			15.6	53.8	5/8"	1-3/8"	9.0	72	
354-1CWX0		15.53	11.45	11,700	4.0	2.8	4x350		10.3	35.9	5/8"	1-3/8"	6.0	69	
354-1DWX0		19.08	14.06	11,448	4.0	2.8			13.8	47.8	5/8"	1-3/8"	10.0	77	
354-1EWX0		21.98	16.20	11,232	4.0	2.7			17.2	59.8	5/8"	1-3/8"	10.0	84	
354-1FWX0		24.42	18.00	11,016	4.0	2.7			20.7	71.7	5/8"	1-3/8'	12.0	92	

[1] Measured at 0.25 m/s

[2] Sized to suit nominal expansion valve outlet

[3] Calculated on 15 metre equivalent length (distance between the condensing unit and the unit cooler)

[4] Optional but recommended for rooms below 1°C

efficacy
Dual Discharge Coolers

© Copyright HC Heat-Exchangers (PTY) Ltd.

Subject to change without prior notice.

DIMENSIONAL DRAWINGS

DDe351

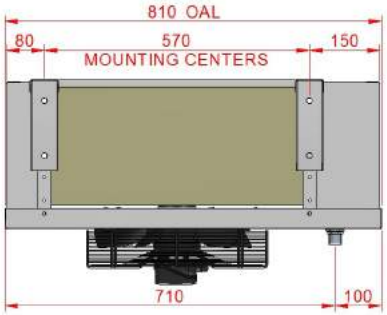

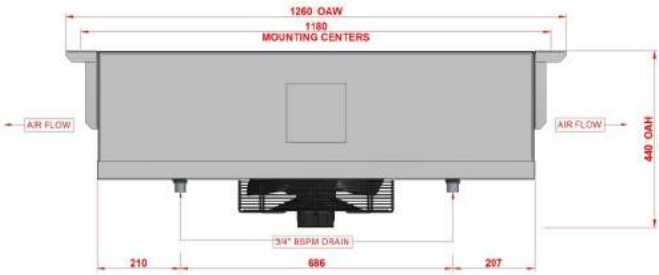

DDe352

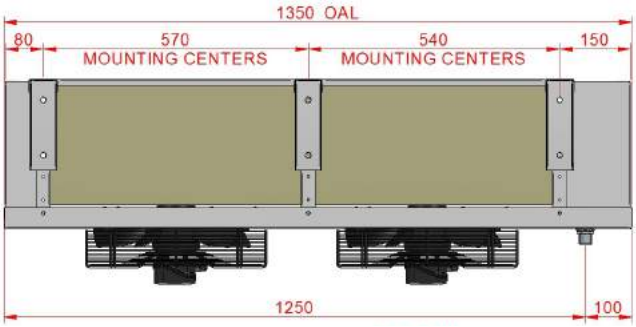

DDe353

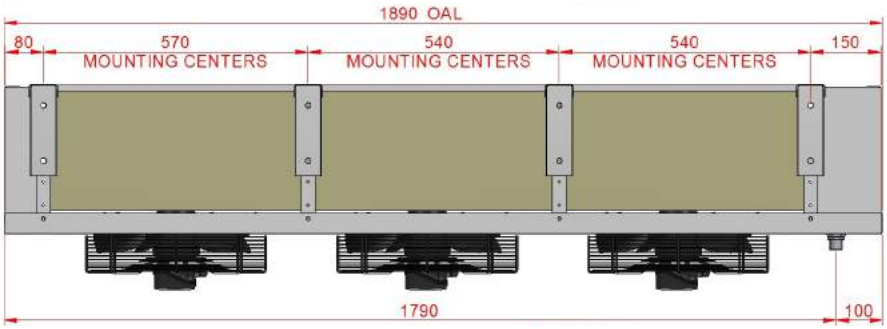

DDe354

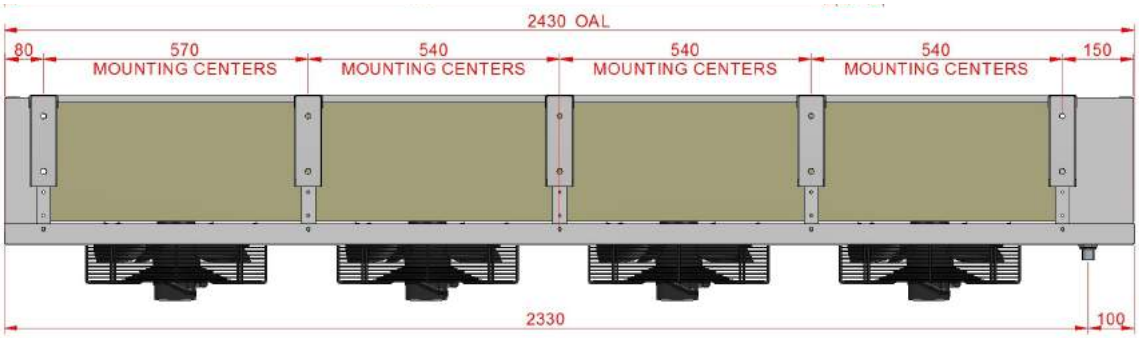

© Copyright HC Heat-Exchangers (PTY) Ltd.

Subject to change without prior notice.

ELEMENT DRAWINGS

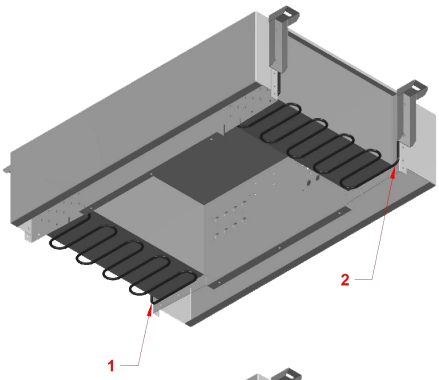

DDe351

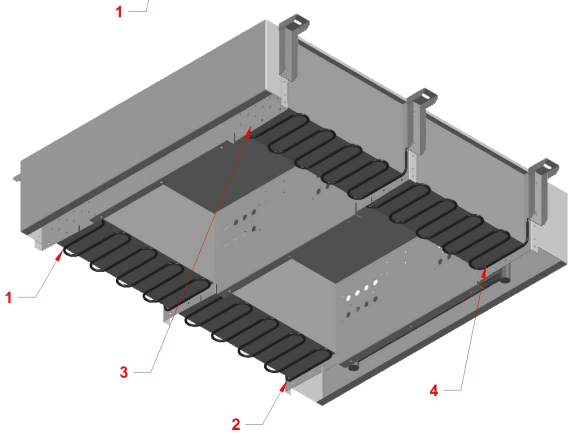

DDe352

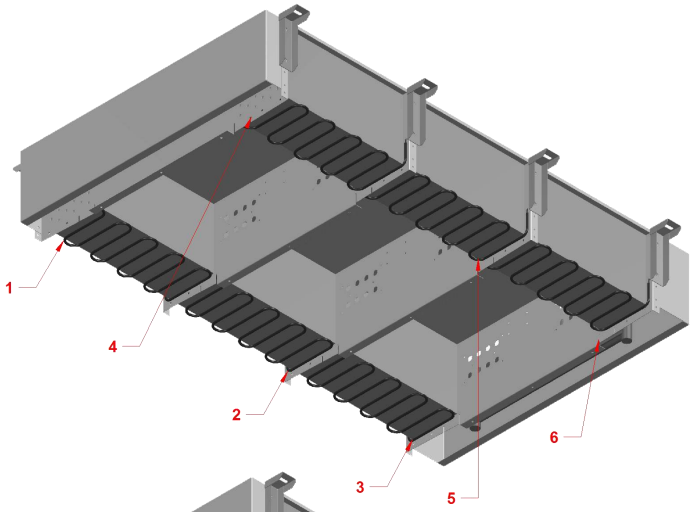

DDe353

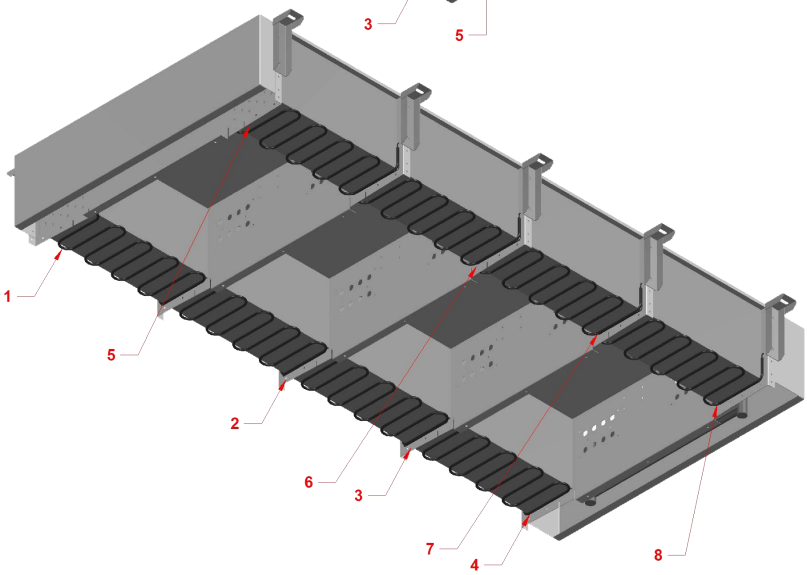

DDe354

© Copyright HC Heat-Exchangers (PTY) Ltd.

Subject to change without prior notice.

ELECTRICAL SPECIFICATIONS

Defrost Technical & Wiring Data						
Model	**Phase**	**Heater**	**Watts**	**Volts**	**Amps**	**Klixon**
351	L1+L2	1+2	2640	230	11.5	14T31(25A)
352	L1	1+2	2640	230	11.5	14T31(25A)
	L2	3+4	2640	230	11.5	
353	L1	1+2+3	3960	230	17.2	14T31(25A)
	L2	4+5+6	3960	230	17.2	
354	L1	1+2+3+4	5280	230	23	14T31(25A)
	L2	5+6+7+8	5280	230	23	

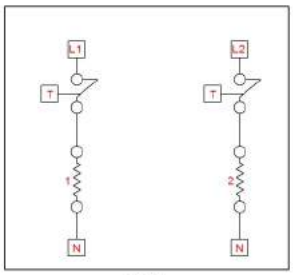

351

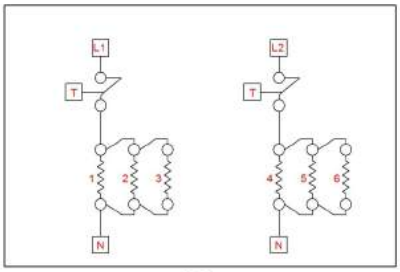

353

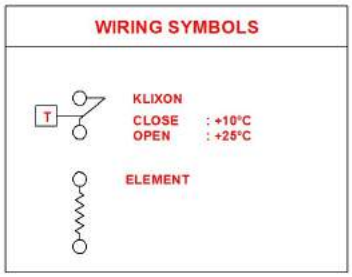

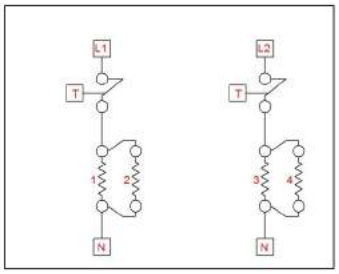

352

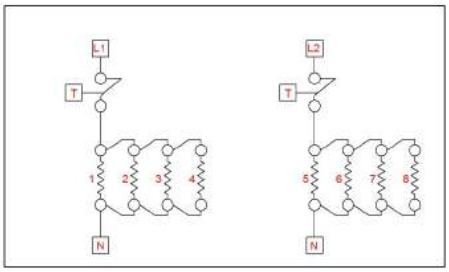

354

Fan Technical & Wiring Data					
Standard (AC - 1 Phase)					
EBM S4E350 External Rotor Motor					
Diameter mm	**Voltage V**	**Frequency Hz**	**RPM**	**Power W**	**Amperage A**
350	230	50	1400	130	0.58
Optional (AC - 3 Phase)					
EBM S4D350 External Rotor Motor					
Diameter mm	**Voltage V**	**Frequency Hz**	**RPM**	**Power W**	**Amperage A**
350	400	50	1365	130	0.35

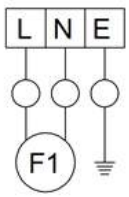

L - BLUE
N - BROWN
E - GREEN/YELLOW
F1 - FAN MOTOR

DDe500

COMMERCIAL DUAL DISCHARGE COOLER

PERFORMANCE DATA							TECHNICAL DATA								
Series	Fins Per Inch (Spacing - mm)	Capacity @ SC2 - kW	Capacity @ SC3 - kW	Air Flow - m^3/hr	Air Throw - m [1]	Face Velocity - m/s	Fans - Qty x Dia - mm	Fan Model - ebm-papst	Coil Internal Volume - lt	Coil Surface Area - m^2	Liquid Connection - Inch [2]	Suction Connection - Inch [3]	Electric Defrost - kW [4]	Unit Mass - kg	Drain Fitting - Inch
501-3CNX0	6FPI (4.2mm)	13.86	10.21	9 396	5.0	3.0	1x500	S4D500	8.0	38.8	5/8"	1-3/8"	3.2	73	3/4" BSPM
501-3DNX0		16.92	12.47	9 252	5.0	3.0			10.6	51.7	5/8'	1-3/8"	6.3	77	
501-3ENX0		19.41	14.31	9 108	5.0	3.0			13.3	64.7	5/8"	1-3/8"	6.3	83	
501-3FNX0		21.42	15.79	8 964	5.0	2.9			16.0	77.6	5/8"	1-3/8"	8.1	89	
502-3CNX0		27.86	20.53	18 828	5.0	3.0	2x500		15.5	77.6	7/8"	1-5/8"	7.2	124	
502-3DNX0		33.98	25.04	18 540	5.0	3.0			20.6	103.5	7/8"	1-5/8"	12.6	135	
502-3ENX0		39.09	28.81	18 216	5.0	3.0			25.8	129.4	7/8"	1-5/8"	12.6	150	
502-3FNX0		43.10	31.76	17 928	5.0	2.9			31.0	155.2	7/8"	1-5/8"	16.2	162	
503-3CNX0		40.25	29.66	28 080	5.0	3.2	3x500		21.6	109.4	7/8"	2-1/8"	10.8	174	
503-3DNX0		49.45	36.44	27 612	5.0	3.2			28.8	145.9	7/8"	2-1/8"	18.9	184	
503-3ENX0		56.77	41.84	27 144	5.0	3.9			36.1	182.3	1-1/8"	2-1/8"	18.9	210	
503-3FNX0		62.72	46.22	26 676	5.0	3.1			43.3	218.8	1-1/8"	2-1/8"	24.3	225	
501-3CWX0	4FPI (6.35mm)	11.90	8.77	9 504	5.0	3.1	1x500	S4D500	8.0	26.8	5/8"	1-3/8"	3.2	72	3/4" BSPM
501-3DWX0		14.82	10.92	9 396	5.0	3.0			10.6	35.7	5/8'	1-3/8"	6.3	76	
501-3EWX0		17.26	12.72	9 288	5.0	3.0			13.3	44.6	5/8"	1-3/8"	6.3	82	
501-3FWX0		19.37	14.28	9 180	5.0	3.0			16.0	53.5	5/8"	1-3/8"	8.1	88	
502-3CWX0		23.94	17.64	19 008	5.0	3.1	2x500		15.5	53.5	7/8"	1-5/8"	7.2	122	
502-3DWX0		29.78	21.95	18 792	5.0	3.0			20.6	71.3	7/8"	1-5/8"	12.6	133	
502-3EWX0		34.67	25.55	18 612	5.0	3.0			25.8	89.2	7/8"	1-5/8"	12.6	148	
502-3FWX0		38.87	28.65	18 360	5.0	3.0			31.0	107.0	7/8"	1-5/8"	16.2	160	
503-3CWX0		34.61	25.51	28 404	5.0	3.3	3x500		21.6	75.4	7/8"	2-1/8"	10.8	170	
503-3DWX0		43.11	31.77	28 044	5.0	3.2			28.8	100.5	7/8"	2-1/8"	18.9	180	
503-3EWX0		50.47	37.20	27 720	5.0	3.2			36.1	125.7	1-1/8"	2-1/8"	18.9	206	
503-3FWX0		56.42	41.58	27 360	5.0	3.1			43.3	150.8	1-1/8"	2-1/8"	24.3	221	

[1] Measured at 0.25 m/s

[2] Sized to suit nominal expansion valve outlet

[3] Calculated on 15 metre equivalent length (distance between the condensing unit and the unit cooler)

[4] Optional but recommended for rooms below 1°C

efficacy
Dual Discharge Coolers

© Copyright HC Heat-Exchangers (PTY) Ltd.

Subject to change without prior notice.

DIMENSIONAL DRAWINGS

DDe501

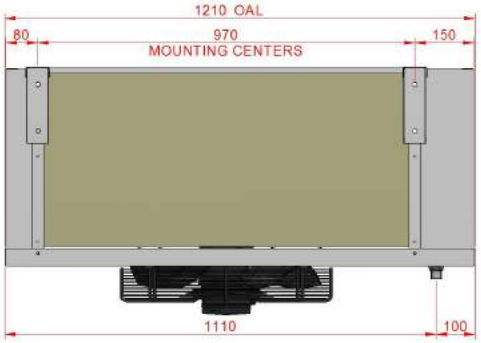

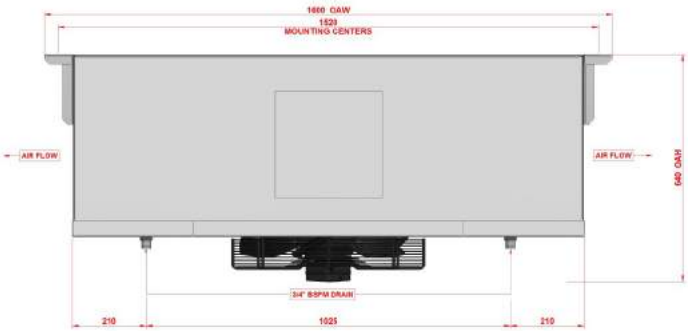

DDe502

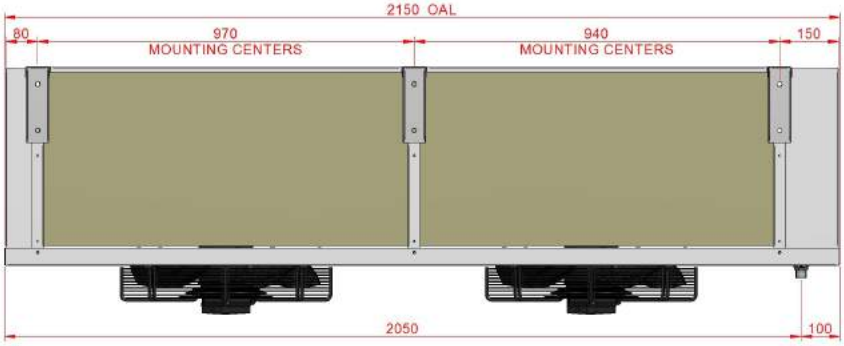

DDe503

© Copyright HC Heat-Exchangers (PTY) Ltd.

Subject to change without prior notice.

ELEMENT DRAWINGS

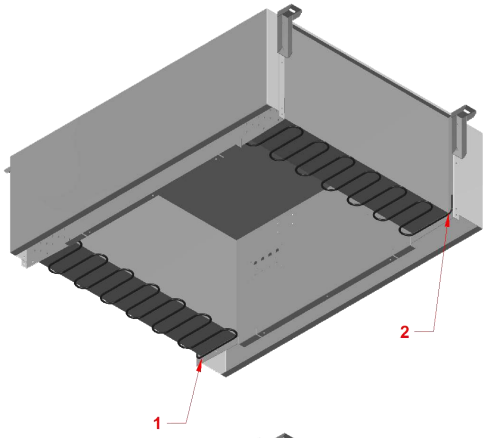

DDe501

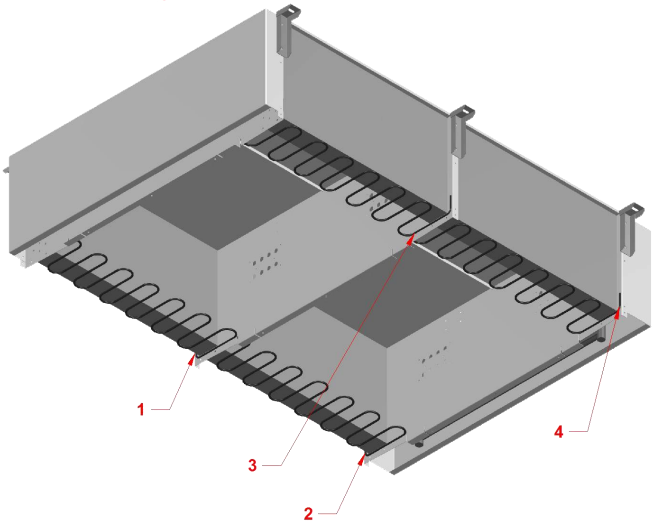

DDe502

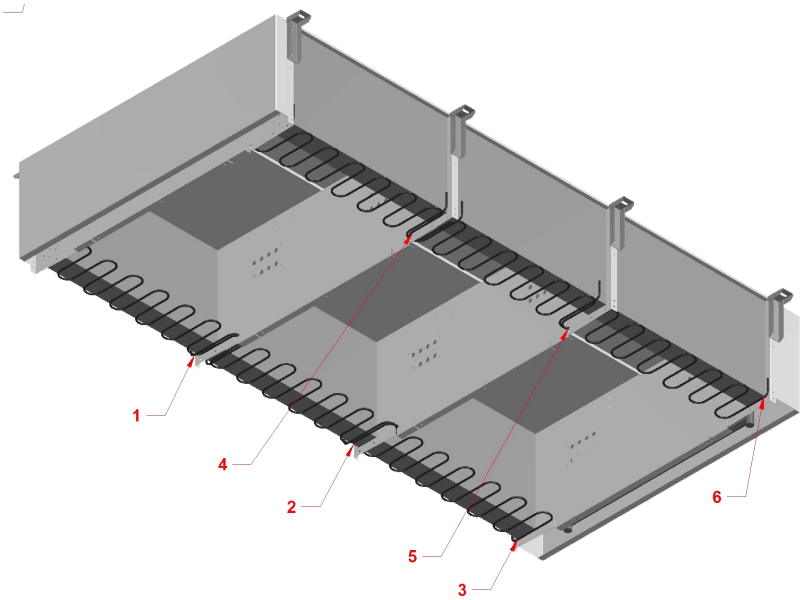

DDe503

ELECTRICAL SPECIFICATIONS

Defrost Technical & Wiring Data						
Model	**Phase**	**Heater**	**Watts**	**Volts**	**Amps**	**Klixon**
501	L1	1	2160	230	9.4	14T31(25A)
	L2	2	2160	230	9.4	
502	L1	1+2	4320	230	18.8	14T31(25A)
	L2	3+4	4320	230	18.8	
503	L1	1+2+3	6480	230	28.2	14T31(25A)
	L2	4+5+6	6480	230	28.2	

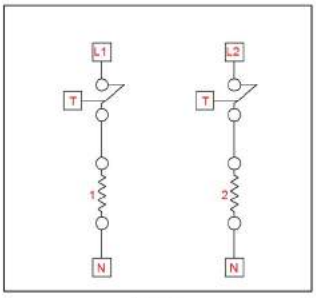

501

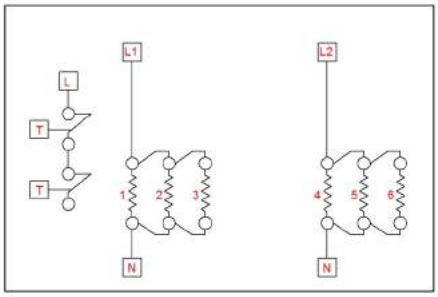

503

CONNECT DEFROST KLIXON INTO
DEFROST CONTROL CIRCUIT ON 503

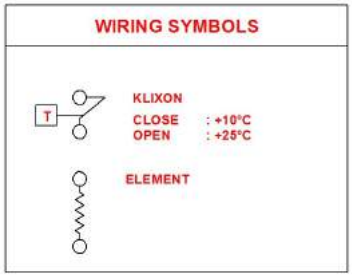

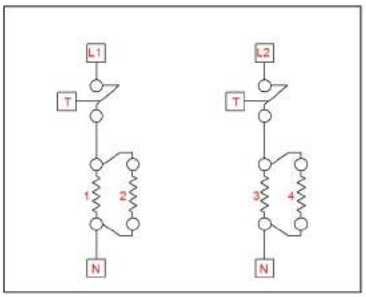

502

Fan Technical & Wiring Data					
Standard (AC - 3 Phase Delta)					
EBM S4D500 External Rotor Motor					
Diameter mm	**Voltage V**	**Frequency Hz**	**RPM**	**Power W**	**Amperage A**
500	400	50	1390	720	1.41
Optional (AC - 1 Phase)					
EBM S4E500 External Rotor Motor					
Diameter mm	**Voltage V**	**Frequency Hz**	**RPM**	**Power W**	**Amperage A**
500	230	50	1300	680	3.00
Optional					
N/A					

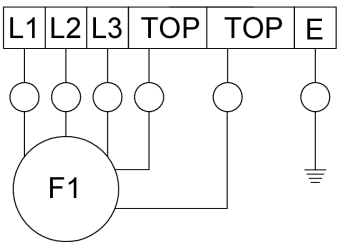

L1 - BLACK
L2 - BLUE
L3 - BROWN
TOP - PURPLE
TOP - PINK
E - GREEN/YELLOW
F1 - FAN MOTOR

© Copyright HC Heat-Exchangers (PTY) Ltd.

Subject to change without prior notice.

Johannesburg Branch

Corner Amber & Serenade Roads, Elandsfontein, Johannesburg, South Africa.

Tel: +27-11 674 1237 | sales@hcaircon.com

Cape Town Branch

Unit #3 Garnett Park, 6 Drill Avenue, Montague Gardens, Cape Town, South Africa.

Tel: +27-21 555 3921 | sales@hcaircon.com

www.hcaircon.com